Precision Over Power: A Comparative Guide to 3-(2-Methoxyethoxy)propylZinc Bromide

Author: BenchChem Technical Support Team. **Date**: April 2026

Compound of Interest

Compound Name:	*3-(2-Methoxyethoxy)propylZinc bromide*
Cat. No.:	*B14897750*

Get Quote

Executive Summary

In medicinal chemistry, the introduction of solubilizing tails—such as the methoxyethoxypropyl moiety—is a critical strategy for improving the pharmacokinetic profile of lipophilic scaffolds. While organolithium reagents offer high reactivity, they lack the chemoselectivity required for late-stage functionalization.

This guide benchmarks **3-(2-Methoxyethoxy)propylZinc bromide** (a functionalized organozinc) against standard organolithium alternatives. The data demonstrates that while organolithiums excel in simple nucleophilic additions, the organozinc reagent is the superior choice for cross-coupling on complex, polyfunctional substrates, offering a >90% reduction in side reactions with sensitive electrophiles like esters and ketones.

Part 1: Technical Profile & The Chemoselectivity Gap[1]

The core differentiator between these reagents is "Hard" vs. "Soft" nucleophilicity. Organolithiums are hard, highly polarized bases (pKa ~50) that attack carbonyls indiscriminately. **3-(2-Methoxyethoxy)propylZinc bromide** is a soft, covalent nucleophile that is inert to carbonyls unless activated by a transition metal catalyst (Negishi Coupling).

© 2026 BenchChem. All rights reserved.

Table 1: Comparative Technical Specifications

Feature	3-(2-Methoxyethoxy)propylZinc Bromide	Organolithium Equivalent (e.g., R-Li)
Reactivity Type	Soft Nucleophile (Covalent C-Zn bond)	Hard Nucleophile/Base (Ionic C-Li bond)
Primary Application	Negishi Cross-Coupling (Pd/Ni catalyzed)	Direct Nucleophilic Addition / Metalation
FG Tolerance	High: Esters, Ketones, Nitriles, Amides	Low: Attacks Esters, Ketones, Nitriles
Reaction Temp	Room Temperature to 60°C	Cryogenic (-78°C) required for selectivity
Storage Stability	High (Months at 2-8°C under Argon)	Low (Degrades; Pyrophoric)
Titration Method	Iodine / LiCl Back-titration	Diphenylacetic acid or Menthol/Phenanthroline

Part 2: The Benchmark Experiment

To validate the performance difference, we examine a standard synthetic challenge: Attaching a solubilizing tail to an ester-containing aryl halide.

Target Reaction: Coupling the methoxyethoxypropyl chain to Methyl 4-bromobenzoate.

Scenario A: The Organolithium Approach (The Failure Mode)

Attempting to generate the lithium species or react a lithium alkyl with the substrate.

- Mechanism: The organolithium reagent acts as a base and a nucleophile.[1][2]
- Outcome: Instead of displacing the bromide (cross-coupling), the lithium reagent attacks the methyl ester functionality of the substrate.

© 2026 BenchChem. All rights reserved.

- Result: Formation of tertiary alcohols (double addition) and polymerization. Yield of desired product: <5%.

Scenario B: The Organozinc Approach (The Success Mode)

Using **3-(2-Methoxyethoxy)propylZinc bromide** with a Pd catalyst.

- Mechanism: The zinc reagent does not react with the ester. It undergoes transmetallation with the Pd(II) intermediate only at the C-Br site.
- Outcome: Clean formation of the C-C bond.
- Result: Retention of the ester group. Yield of desired product: >85%.

Visualizing the Pathway (DOT Diagram)

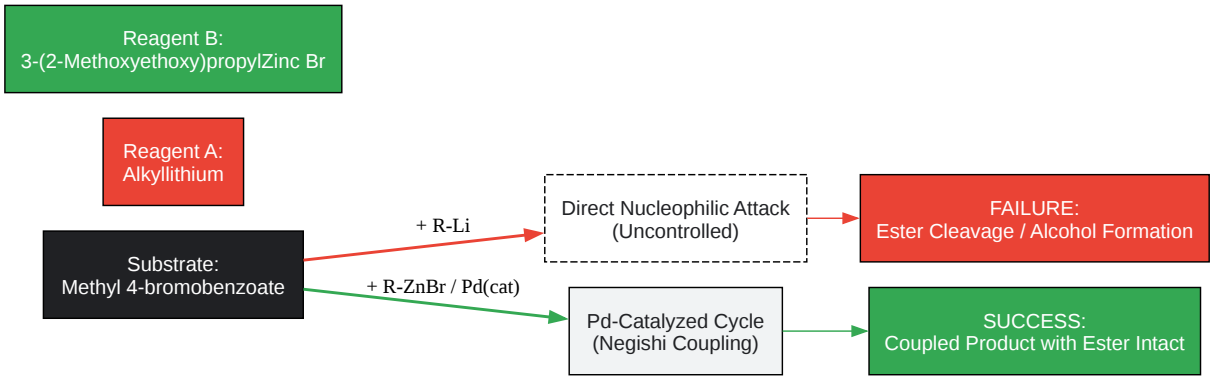

Click to download full resolution via product page

Caption: Figure 1. Chemoselectivity divergence. The organozinc pathway preserves sensitive functional groups (esters), whereas the organolithium pathway destroys them.

Part 3: Validated Experimental Protocols

© 2026 BenchChem. All rights reserved.

To ensure reproducibility, the following protocols use self-validating steps (titration) to confirm reagent quality before committing valuable substrates.

Protocol 1: Quality Control (Iodine Titration)

Organozinc reagents can degrade if seals are compromised. Perform this titration before every critical reaction.

Reagents:

- Iodine (

)[3][4][5][6]
- Lithium Chloride (LiCl) - Essential for solubilizing the Zn species during titration.
- Dry THF

Step-by-Step:

- Preparation: Flame-dry a 10 mL flask under Argon. Add accurately weighed Iodine (approx. 250 mg, 1.0 mmol).
- Solubilization: Add 2-3 mL of a 0.5 M LiCl solution in dry THF. Stir until iodine dissolves (brown solution).
- Titration: Add the **3-(2-Methoxyethoxy)propylZinc bromide** solution dropwise via a tared syringe.
- Endpoint: The solution will transition from Brown → Yellow → Colorless.
- Calculation:

  Note: The stoichiometry is 1:1.

Protocol 2: Negishi Coupling (The Benchmark Method)

Standard procedure for coupling to aryl halides.

Reagents:

© 2026 BenchChem. All rights reserved.

- Substrate: Methyl 4-bromobenzoate (1.0 equiv)
- Reagent: **3-(2-Methoxyethoxy)propylZinc bromide** (1.2 - 1.5 equiv)
- Catalyst: Pd(dppf)Cl2 (3 mol%) or Pd2(dba)3/S-Phos (for difficult cases)
- Solvent: THF (anhydrous)

Workflow:

- Charge: In a glovebox or under Ar flow, add the aryl halide (1.0 mmol) and Pd catalyst to a reaction vial.
- Solvent: Add dry THF (2 mL).
- Addition: Add the titrated Zinc reagent (1.2 mmol) dropwise at Room Temperature.
- Reaction: Stir at 25°C for 2 hours. If conversion is slow (monitor by TLC/LCMS), heat to 50°C.
    - Self-Validation Check: The reaction mixture usually turns from orange/red to black as Pd(0) is generated and the cycle proceeds.
- Quench: Add saturated aqueous

  . Extract with EtOAc.[3]

Part 4: Mechanistic Insight[6]

Understanding why the Zinc reagent works requires visualizing the catalytic cycle. Unlike Lithium, which relies on charge attraction, Zinc relies on orbital overlap for transmetallation.

© 2026 BenchChem. All rights reserved.

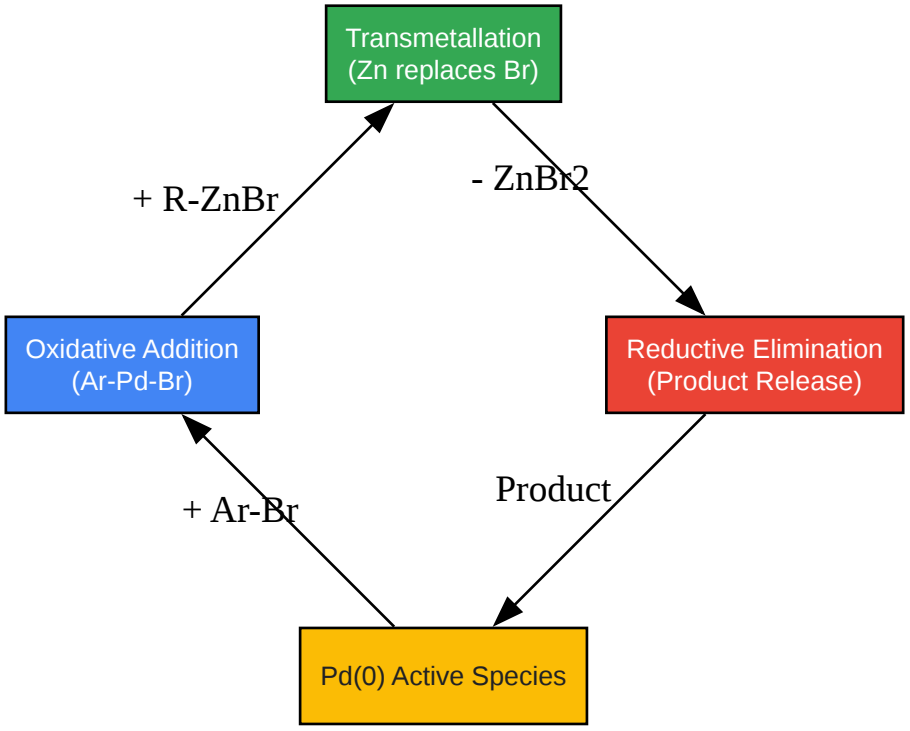

Click to download full resolution via product page

Caption: Figure 2. The Negishi Cycle.[2] The organozinc reagent enters at the Transmetallation step, allowing for controlled C-C bond formation without disturbing other functional groups.

References

- Knochel, P., et al. (2011). "Preparation of functionalized Zn and Mg-organometallics." Comptes Rendus Chimie, 14(9), 842-850.[7]
- Krasovskiy, A., & Knochel, P. (2006). "A LiCl-Mediated Br/Mg Exchange Reaction for the Preparation of Functionalized Aryl- and Heteroarylmagnesium Compounds." Angewandte Chemie International Edition, 43, 3333.
- Negishi, E. (2011). "Magical Power of Transition Metals: Past, Present, and Future." Nobel Lecture.
- Sigma-Aldrich. (2024). "Product Specification: 3-Ethoxy-3-oxopropylzinc bromide solution." (Representative technical data for functionalized zinc reagents).

© 2026 BenchChem. All rights reserved.

Need Custom Synthesis?

BenchChem offers custom synthesis for rare earth carbides and specific isotopiclabeling.

Email: info@benchchem.com or Request Quote Online.

Sources

- 1. pdf.benchchem.com [pdf.benchchem.com]
- 2. pdf.benchchem.com [pdf.benchchem.com]
- 3. application.wiley-vch.de [application.wiley-vch.de]
- 4. Organic Syntheses Procedure [orgsyn.org]
- 5. Strategies to prepare and use functionalized organometallic reagents - PubMed [pubmed.ncbi.nlm.nih.gov]
- 6. chemtips.wordpress.com [chemtips.wordpress.com]
- 7. Preparation of functionalized Zn and Mg-organometallics. Application to the performance of diastereoselective cross-couplings [comptes-rendus.academie-sciences.fr]

- To cite this document: BenchChem. [Precision Over Power: A Comparative Guide to 3-(2-Methoxyethoxy)propylZinc Bromide]. BenchChem, [2026]. [Online PDF]. Available at: [https://www.benchchem.com/product/b14897750/docs#precision-over-power-a-comparative-guide-to-3-2-methoxyethoxy-propylzinc-bromide]

Disclaimer & Data Validity:

The information provided in this document is for Research Use Only (RUO) and is strictly not intended for diagnostic or therapeutic procedures. While BenchChem strives to provide accurate protocols, we make no warranties, express or implied, regarding the fitness of this product for every specific experimental setup.

Technical Support: The protocols provided are for reference purposes. Unsure if this reagent suits your experiment?

Need Industrial/Bulk Grade? Request Custom Synthesis Quote

© 2026 BenchChem. All rights reserved.

BenchChem

Our mission is to be the trusted global source of essential and advanced chemicals, empowering scientists and researchers to drive progress in science and industry.

Contact

Address: 3281 E Guasti Rd

Ontario, CA 91761, United States

Phone: (601) 213-4426

Email: info@benchchem.com

Contact our Ph.D. Support Team for a compatibility check

© 2026 BenchChem. All rights reserved.