Technical Support Center: Horner-Wadsworth-Emmons Reaction Selectivity

Author: BenchChem Technical Support Team. **Date**: May 2026

Compound of Interest

Compound Name:	*Diethyl (2-oxopropyl)phosphonate*
CAS No.:	*1067-71-6*
Cat. No.:	*B148940*

Get Quote

Welcome to the technical support center for the Horner-Wadsworth-Emmons (HWE) reaction. This resource provides troubleshooting guides and frequently asked questions (FAQs) to help researchers, scientists, and drug development professionals optimize their reaction outcomes, with a specific focus on the impact of the chosen base on stereoselectivity.

Frequently Asked Questions (FAQs)

Q1: What is the general role of the base in the Horner-Wadsworth-Emmons reaction?

A1: The primary role of the base in the HWE reaction is to deprotonate the phosphonate ester at the α-carbon, generating a stabilized phosphonate carbanion.[1][2] This carbanion is a key reactive intermediate that then undergoes a nucleophilic attack on the carbonyl carbon of an aldehyde or ketone.[1][2] The choice of base is critical as it not only facilitates the formation of the carbanion but also significantly influences the stereoselectivity (the E/Z ratio) of the resulting alkene.[1]

© 2026 BenchChem. All rights reserved.

Q2: How does the strength of the base affect the E/Z selectivity of the HWE reaction?

A2: The strength of the base plays a pivotal role in determining the E/Z selectivity of the HWE reaction. Strong bases, such as sodium hydride (NaH) and lithium bis(trimethylsilyl)amide (LHMDS), typically favor the formation of the thermodynamically more stable (E)-alkene.[3] This is because strong bases can lead to reversible reaction intermediates, allowing for equilibration to the more stable trans-oxaphosphetane intermediate.[2] In contrast, milder bases, like 1,8-diazabicyclo[5.4.0]undec-7-ene (DBU) or triethylamine (NEt3) often in the presence of additives like LiCl, are employed for base-sensitive substrates and can also favor (E)-selectivity.[2][3] For high (Z)-selectivity, specific conditions such as the Still-Gennari modification, which utilizes phosphonates with electron-withdrawing groups and a strong base like potassium bis(trimethylsilyl)amide (KHMDS) in the presence of 18-crown-6, are typically required.

Q3: My HWE reaction is showing low E/Z selectivity. What are the potential causes related to the base?

A3: Low E/Z selectivity in an HWE reaction can stem from several factors related to the choice and handling of the base:

- Inappropriate Base Strength: The pKa of the phosphonate dictates the required base strength. If the base is not strong enough to completely deprotonate the phosphonate, a mixture of products may result.
- Cation Effects: The counter-ion of the base (e.g., Li+, Na+, K+, Mg2+) can significantly influence the stereochemical outcome.[4][5] For instance, in some systems, lithium cations have been shown to be more effective for (E)-selectivity under mild conditions.[4]
- Reaction Temperature: Temperature can affect the equilibration of reaction intermediates.[4] Higher temperatures often favor the thermodynamically more stable (E)-isomer.[2][4]
- Incomplete Deprotonation: Insufficient reaction time or temperature during the deprotonation step can lead to incomplete formation of the phosphonate carbanion, impacting both yield and selectivity.

© 2026 BenchChem. All rights reserved.

Troubleshooting Guides

Issue 1: Predominantly (E)-alkene is desired, but a significant amount of (Z)-isomer is forming.

Potential Cause	Troubleshooting Step
Base is not promoting thermodynamic control.	Switch to a stronger base like Sodium Hydride (NaH) to facilitate the equilibration of intermediates towards the more stable (E)-product.[3]
Cation effect is not optimal for (E)-selectivity.	If using a potassium or sodium base, consider switching to a lithium-based base (e.g., n-BuLi or LHMDS), as Li+ can favor (E)-selectivity.[2] For certain substrates, magnesium-based reagents like iPrMgCl have shown high (E)-selectivity.[4]
Reaction temperature is too low.	Increase the reaction temperature after the addition of the aldehyde.[2][4] Running the reaction at room temperature or slightly elevated temperatures can favor the formation of the (E)-alkene.[4]

Issue 2: The reaction is not proceeding to completion, and starting material remains.

© 2026 BenchChem. All rights reserved.

Potential Cause	Troubleshooting Step
The base is not strong enough for the phosphonate.	The acidity of the α-proton on the phosphonate ester is crucial. If using a weak base like K2CO3 or DBU, it may be insufficient for less acidic phosphonates.[3] Switch to a stronger base such as NaH or LHMDS.
Incomplete deprotonation of the phosphonate.	Ensure the deprotonation step is complete before adding the aldehyde. This can be achieved by increasing the reaction time or temperature during this initial step. With NaH, stirring until hydrogen evolution ceases is a good indicator of complete carbanion formation.[1]
Base is degraded or impure.	Use freshly opened or properly stored anhydrous base. For example, NaH should be washed with anhydrous hexanes to remove mineral oil before use.[3]

Issue 3: Low yield is obtained with a base-sensitive substrate.

Potential Cause	Troubleshooting Step
Strong base is causing decomposition of the starting material or product.	Employ milder reaction conditions. The Masamune-Roush conditions, using a combination of LiCl and a tertiary amine base like DBU or triethylamine, are suitable for base-sensitive substrates.[2][5]
The reaction conditions are too harsh.	Consider using a weaker inorganic base like K2CO3, potentially with a phase-transfer catalyst like 18-crown-6 to enhance its effectiveness in organic solvents.[3]

Quantitative Data Summary

© 2026 BenchChem. All rights reserved.

The choice of base and its corresponding cation can have a dramatic effect on the E/Z selectivity of the Horner-Wadsworth-Emmons reaction. The following table summarizes representative data for the reaction of a Weinreb amide-type HWE reagent with 3-phenylpropanal under various strong base conditions.

Entry	Base	Cation	Temperature (°C)	Yield (%)	E/Z Ratio
1	LHMDS	Li+	-78	-	Z-selective
2	LHMDS	Li+	0	-	E-selective
3	NaHMDS	Na+	-78	-	E-selective
4	KHMDS	K+	-78	-	E-selective
5	nBuLi	Li+	-78	-	low E-selectivity
6	NaH	Na+	0	-	E-selective
7	tBuOK	K+	-78	-	E-selective
8	iPrMgBr	Mg2+	rt	73	99:1

Data adapted from a study on a Weinreb amide-type HWE reaction.[4][5] Note that yields and selectivities are highly substrate-dependent.

Experimental Protocols

Protocol 1: General (E)-Selective HWE Reaction Using Sodium Hydride (NaH)

This protocol is designed for the synthesis of an (E)-alkene from an aldehyde and a phosphonate ester like triethyl phosphonoacetate.[1][3]

Materials:

- Sodium hydride (60% dispersion in mineral oil)

© 2026 BenchChem. All rights reserved.

- Anhydrous tetrahydrofuran (THF)
- Phosphonate ester (e.g., triethyl phosphonoacetate)
- Aldehyde
- Saturated aqueous ammonium chloride (NH4Cl) solution
- Ethyl acetate
- Brine
- Anhydrous sodium sulfate (Na2SO4)

Procedure:

- To a flame-dried, three-necked round-bottom flask under an inert atmosphere (e.g., nitrogen or argon), add sodium hydride (1.2 equivalents). If desired, wash the NaH with anhydrous hexanes to remove the mineral oil.
- Add anhydrous THF to create a suspension.
- Cool the suspension to 0 °C using an ice bath.
- Slowly add the phosphonate ester (1.1 equivalents) dropwise.
- Allow the mixture to warm to room temperature and stir for 30-60 minutes, or until hydrogen gas evolution ceases.[1]
- Cool the reaction mixture back to 0 °C.
- Add a solution of the aldehyde (1.0 equivalent) in anhydrous THF dropwise.
- Allow the reaction to warm to room temperature and stir until thin-layer chromatography (TLC) indicates complete consumption of the aldehyde.
- Carefully quench the reaction at 0 °C by the slow addition of saturated aqueous NH4Cl solution.

© 2026 BenchChem. All rights reserved.

- Extract the aqueous layer with ethyl acetate (3 times).
- Combine the organic layers, wash with brine, dry over anhydrous Na2SO4, filter, and concentrate under reduced pressure.
- Purify the crude product by flash column chromatography to obtain the desired (E)-alkene.

Protocol 2: Mild (E)-Selective HWE Reaction for Base-Sensitive Substrates (Masamune-Roush Conditions)

This protocol is adapted for substrates that are sensitive to strong bases.[2][6]

Materials:

- Anhydrous lithium chloride (LiCl)
- Anhydrous acetonitrile or THF
- 1,8-Diazabicyclo[5.4.0]undec-7-ene (DBU) or Triethylamine (NEt3)
- Phosphonate ester
- Aldehyde
- Water
- Diethyl ether or ethyl acetate
- Brine
- Anhydrous sodium sulfate (Na2SO4)

Procedure:

- To a flame-dried flask under an inert atmosphere, add anhydrous LiCl (1.2 equivalents).
- Add anhydrous acetonitrile or THF to the flask.
- Add the phosphonate ester (1.1 equivalents) to the suspension.

© 2026 BenchChem. All rights reserved.

- Add the amine base (DBU or NEt3, 1.2 equivalents) to the mixture and stir for approximately 30 minutes.
- Add a solution of the base-sensitive aldehyde (1.0 equivalent) in the same solvent.
- Monitor the reaction by TLC until completion.
- Upon completion, dilute the reaction mixture with water and extract with diethyl ether or ethyl acetate (3 times).
- Combine the organic layers, wash with brine, dry over anhydrous Na2SO4, filter, and concentrate under reduced pressure.
- Purify the crude product by flash column chromatography.

Visualizations

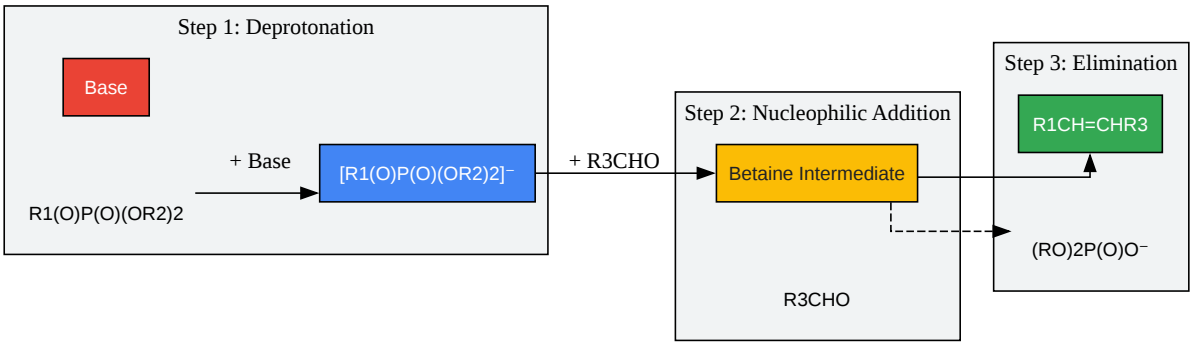

Click to download full resolution via product page

Caption: General mechanism of the Horner-Wadsworth-Emmons reaction.

© 2026 BenchChem. All rights reserved.

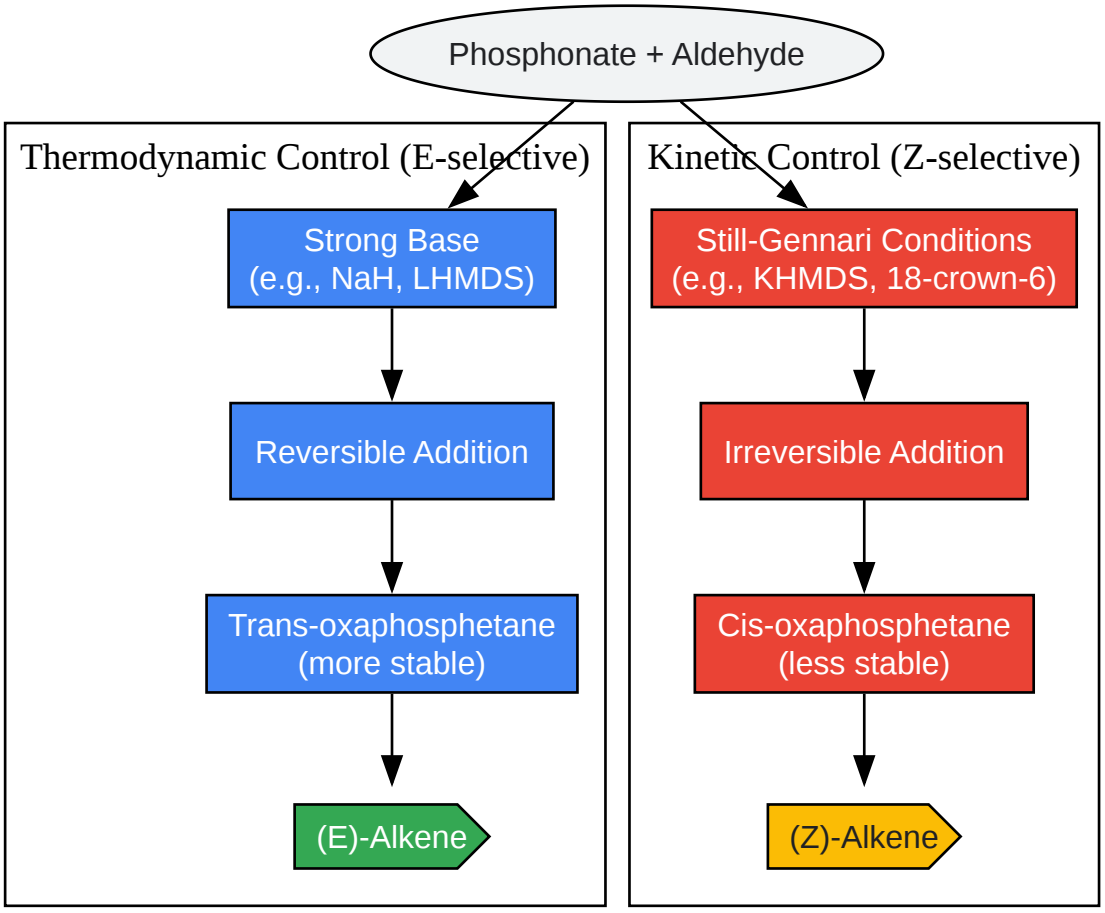

Click to download full resolution via product page

Caption: Influence of base on HWE reaction stereoselectivity pathways.

© 2026 BenchChem. All rights reserved.

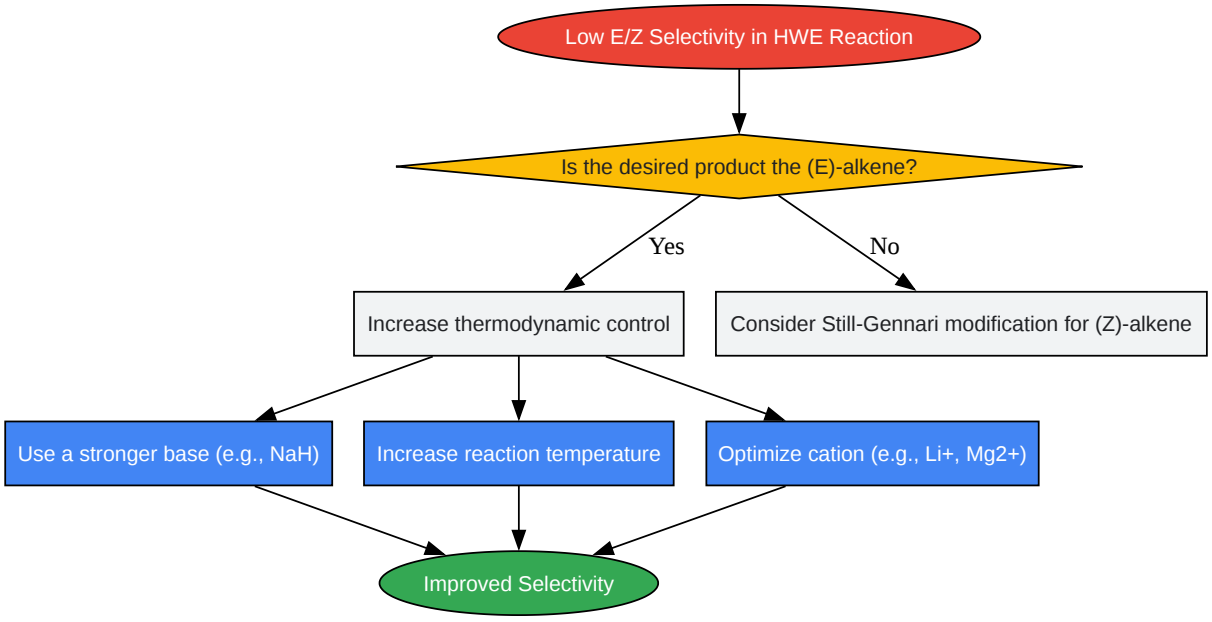

Click to download full resolution via product page

Caption: Troubleshooting workflow for low HWE reaction selectivity.

Need Custom Synthesis?

BenchChem offers custom synthesis for rare earth carbides and specific isotopiclabeling.

Email: info@benchchem.com or Request Quote Online.

References

- 1. benchchem.com [benchchem.com]
- 2. Horner–Wadsworth–Emmons reaction - Wikipedia [en.wikipedia.org]
- 3. benchchem.com [benchchem.com]

© 2026 BenchChem. All rights reserved.

- 4. (E)-Selective Weinreb Amide-Type Horner–Wadsworth–Emmons Reaction: Effect of Reaction Conditions, Substrate Scope, Isolation of a Reactive Magnesium Phosphonoenolate, and Applications - PMC [pmc.ncbi.nlm.nih.gov]
- 5. pubs.acs.org [pubs.acs.org]
- 6. Horner-Wadsworth-Emmons Reaction | NROChemistry [nrochemistry.com]
- To cite this document: BenchChem. [Technical Support Center: Horner-Wadsworth-Emmons Reaction Selectivity]. BenchChem, [2026]. [Online PDF]. Available at: [https://www.benchchem.com/product/b148940/docs#technical-support-center-horner-wadsworth-emmons-reaction-selectivity]

Disclaimer & Data Validity:

The information provided in this document is for Research Use Only (RUO) and is strictly not intended for diagnostic or therapeutic procedures. While BenchChem strives to provide accurate protocols, we make no warranties, express or implied, regarding the fitness of this product for every specific experimental setup.

Technical Support: The protocols provided are for reference purposes. Unsure if this reagent suits your experiment?

Need Industrial/Bulk Grade? Request Custom Synthesis Quote

BenchChem

Our mission is to be the trusted global source of essential and advanced chemicals, empowering scientists and researchers to drive progress in science and industry.

Contact

Address: 3281 E Guasti Rd

Ontario, CA 91761, United States

Phone: (601) 213-4426

Email: info@benchchem.com

© 2026 BenchChem. All rights reserved.

Contact our Ph.D. Support Team for a compatibility check

© 2026 BenchChem. All rights reserved.