Technical Support Center: Enhancing the Bioavailability of EGFR-IN-18

Author: BenchChem Technical Support Team. **Date**: April 2026

Compound of Interest

Compound Name: *Egfr-IN-18*

Cat. No.: *B14764873*

Get Quote

This technical support center provides researchers, scientists, and drug development professionals with troubleshooting guides and frequently asked questions (FAQs) to address challenges related to the bioavailability of **EGFR-IN-18**, a representative poorly soluble EGFR inhibitor.

Frequently Asked Questions (FAQs)

Q1: What is **EGFR-IN-18** and why is its bioavailability a concern?

A1: **EGFR-IN-18** is a small molecule inhibitor of the Epidermal Growth Factor Receptor (EGFR), a key target in cancer therapy. Like many kinase inhibitors, **EGFR-IN-18** is characterized by low aqueous solubility, which can significantly limit its oral bioavailability.[1][2][3] Poor bioavailability leads to variable and suboptimal drug exposure, potentially compromising therapeutic efficacy and leading to inconsistent experimental results.[3][4]

Q2: What are the primary factors limiting the oral bioavailability of poorly soluble EGFR inhibitors like **EGFR-IN-18**?

A2: The primary limiting factors include:

© 2026 BenchChem. All rights reserved.

- Low Aqueous Solubility: The compound does not readily dissolve in the gastrointestinal fluids, which is a prerequisite for absorption.[3][5]
- High Melting Point and Molecular Weight: These physicochemical properties can negatively impact dissolution rates.[6]
- First-Pass Metabolism: Significant metabolism of the drug in the liver before it reaches systemic circulation can reduce its bioavailability.[4]
- Efflux by Transporters: P-glycoprotein and other efflux transporters in the intestinal wall can actively pump the drug back into the gut lumen, preventing its absorption.

Q3: What are the common formulation strategies to improve the bioavailability of compounds like **EGFR-IN-18**?

A3: Several formulation strategies can be employed to enhance the oral absorption of poorly soluble drugs:

- Particle Size Reduction: Decreasing the particle size increases the surface area for dissolution.[5] Techniques include micronization and nanomilling.
- Amorphous Solid Dispersions (ASDs): Dispersing the drug in a polymer matrix in an amorphous state can increase its solubility and dissolution rate.[5]
- Lipid-Based Formulations: Formulating the drug in oils, surfactants, and co-solvents can improve its solubilization in the gastrointestinal tract.[6] Self-emulsifying drug delivery systems (SEDDS) are a common example.[6]
- Salt Formation: Creating a salt form of the drug can sometimes improve its solubility and dissolution characteristics. Lipophilic salt formation is a strategy that has been explored for kinase inhibitors.[6]

Troubleshooting Guides

Issue 1: High variability in plasma concentrations of EGFR-IN-18 in animal studies.

Possible Cause & Solution

Possible Cause	Suggested Troubleshooting Steps
Inadequate Formulation	The formulation may not be robust enough to overcome the poor solubility of EGFR-IN-18.
Solution: Develop and screen multiple formulation strategies. Compare a simple suspension to an amorphous solid dispersion and a lipid-based formulation (e.g., SEDDS). Evaluate the in vitro dissolution of each formulation under biorelevant conditions (simulated gastric and intestinal fluids).	
Food Effect	The presence or absence of food in the gastrointestinal tract can significantly alter the absorption of poorly soluble drugs.
Solution: Standardize the feeding schedule for your in vivo studies. Conduct pilot studies in both fasted and fed states to characterize the food effect. This will help in designing more consistent and reproducible experiments.	
Improper Dosing Technique	Inconsistent administration of the oral dose can lead to variability.
Solution: Ensure that the dosing volume is appropriate for the animal model and that the formulation is homogenous (well-suspended) at the time of administration. Use precise oral gavage techniques.	

Issue 2: Low or undetectable plasma levels of EGFR-IN-18 after oral administration.

Possible Cause & Solution

© 2026 BenchChem. All rights reserved.

Possible Cause	Suggested Troubleshooting Steps
Very Poor Solubility and Dissolution	The compound may be precipitating in the gastrointestinal tract before it can be absorbed.
Solution: Re-evaluate the formulation. Consider more advanced enabling formulations such as nano-suspensions or supersaturating drug delivery systems. These can help maintain the drug in a solubilized state for a longer period.[5]	
High First-Pass Metabolism	The drug is being extensively metabolized in the liver.[4]
Solution: Conduct an intravenous (IV) administration study to determine the absolute bioavailability. If the absolute bioavailability is low despite good absorption (indicated by high plasma levels after IV dosing), first-pass metabolism is likely a major contributor. In such cases, co-administration with a CYP3A4 inhibitor (if ethically permissible in the experimental design) could be explored to understand the metabolic pathway.[4]	
Analytical Method Not Sensitive Enough	The concentration of the drug in the plasma may be below the limit of detection of the analytical method.
Solution: Optimize the bioanalytical method (e.g., LC-MS/MS) to achieve a lower limit of quantification (LLOQ). This may involve improving sample extraction and cleanup procedures or optimizing mass spectrometry parameters.	

Experimental Protocols

© 2026 BenchChem. All rights reserved.

Protocol 1: In Vitro Dissolution Testing of Different EGFR-IN-18 Formulations

Objective: To compare the dissolution profiles of different **EGFR-IN-18** formulations in biorelevant media.

Methodology:

- Prepare Formulations:
  - Suspension: Suspend **EGFR-IN-18** in a vehicle such as 0.5% methylcellulose.
  - Amorphous Solid Dispersion (ASD): Prepare an ASD of **EGFR-IN-18** with a suitable polymer (e.g., HPMC-AS, PVP VA64) using a solvent evaporation or hot-melt extrusion method.
  - Lipid-Based Formulation (SEDDS): Prepare a self-emulsifying drug delivery system by mixing **EGFR-IN-18** with oils (e.g., Capryol 90), surfactants (e.g., Kolliphor RH 40), and co-solvents (e.g., Transcutol HP).
- Prepare Dissolution Media:
  - Simulated Gastric Fluid (SGF): pH 1.2, without pepsin.
  - Fasted State Simulated Intestinal Fluid (FaSSIF): pH 6.5.
  - Fed State Simulated Intestinal Fluid (FeSSIF): pH 5.0.
- Dissolution Test:
  - Use a USP Apparatus II (paddle apparatus).
  - Add the formulation equivalent to a specific dose of **EGFR-IN-18** to 900 mL of the dissolution medium maintained at 37°C.
  - Stir at a constant speed (e.g., 75 rpm).
  - Withdraw samples at predetermined time points (e.g., 5, 15, 30, 60, 120, 240 minutes).

© 2026 BenchChem. All rights reserved.

- Filter the samples and analyze the concentration of dissolved **EGFR-IN-18** by HPLC or LC-MS/MS.

- Data Analysis:
  - Plot the concentration of dissolved drug versus time to generate dissolution profiles for each formulation in each medium.
  - Compare the extent and rate of dissolution among the different formulations.

Protocol 2: In Vivo Pharmacokinetic Study in Rodents

Objective: To determine the pharmacokinetic profile and oral bioavailability of different **EGFR-IN-18** formulations.

Methodology:

- Animal Model: Use male Sprague-Dawley rats or BALB/c mice.
- Groups:
  - Group 1 (IV): **EGFR-IN-18** in a suitable solubilizing vehicle for intravenous administration (e.g., DMSO/PEG400/Saline).
  - Group 2 (Oral Suspension): **EGFR-IN-18** suspension administered by oral gavage.
  - Group 3 (Oral ASD): **EGFR-IN-18** amorphous solid dispersion administered by oral gavage.
  - Group 4 (Oral SEDDS): **EGFR-IN-18** lipid-based formulation administered by oral gavage.
- Dosing:
  - Administer a single dose of **EGFR-IN-18** (e.g., 10 mg/kg).
  - For oral groups, animals should be fasted overnight prior to dosing.
- Blood Sampling:

© 2026 BenchChem. All rights reserved.

- Collect blood samples (e.g., via tail vein or retro-orbital sinus) at pre-dose and at multiple time points post-dose (e.g., 0.25, 0.5, 1, 2, 4, 6, 8, 24 hours).
- Collect blood into tubes containing an anticoagulant (e.g., K2EDTA).
- Centrifuge the blood samples to separate plasma and store the plasma at -80°C until analysis.

- Sample Analysis:
  - Determine the concentration of **EGFR-IN-18** in plasma samples using a validated LC-MS/MS method.
- Pharmacokinetic Analysis:
  - Use non-compartmental analysis to calculate pharmacokinetic parameters such as Cmax (maximum concentration), Tmax (time to maximum concentration), AUC (area under the curve), and t1/2 (half-life).
  - Calculate the absolute oral bioavailability (F%) for each oral formulation using the formula: F% = (AUCoral / AUCIV) * (DoseIV / Doseoral) * 100.

Data Presentation

Table 1: Hypothetical In Vitro Dissolution Data for **EGFR-IN-18** Formulations

Formulation	Maximum Concentration in FaSSIF (µg/mL)
Suspension	0.5
Amorphous Solid Dispersion	15.2
Lipid-Based Formulation (SEDDS)	25.8

Table 2: Hypothetical In Vivo Pharmacokinetic Parameters of **EGFR-IN-18** in Rats

© 2026 BenchChem. All rights reserved.

Formulation	Dose Route	Cmax (ng/mL)	AUC0-24h (ng*h/mL)	Absolute Bioavailability (F%)
Solution	IV	1500	3200	-
Suspension	Oral	150	960	30%
Amorphous Solid Dispersion	Oral	450	1920	60%
Lipid-Based Formulation (SEDDS)	Oral	700	2560	80%

Visualizations

EGFR Signaling Pathway

© 2026 BenchChem. All rights reserved.

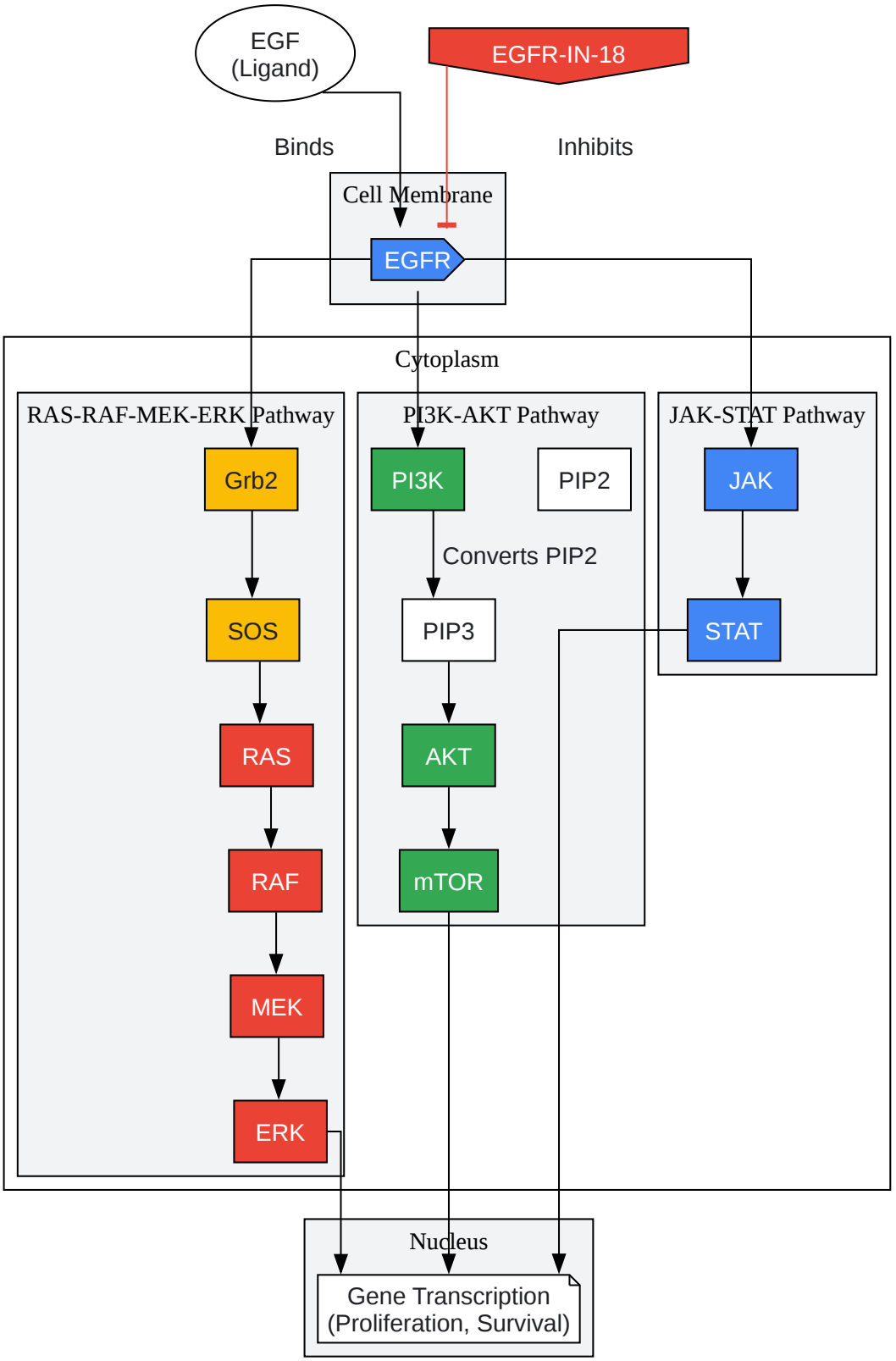

Click to download full resolution via product page

Caption: Simplified EGFR signaling pathways and the inhibitory action of **EGFR-IN-18**.

© 2026 BenchChem. All rights reserved.

Experimental Workflow for Improving Bioavailability

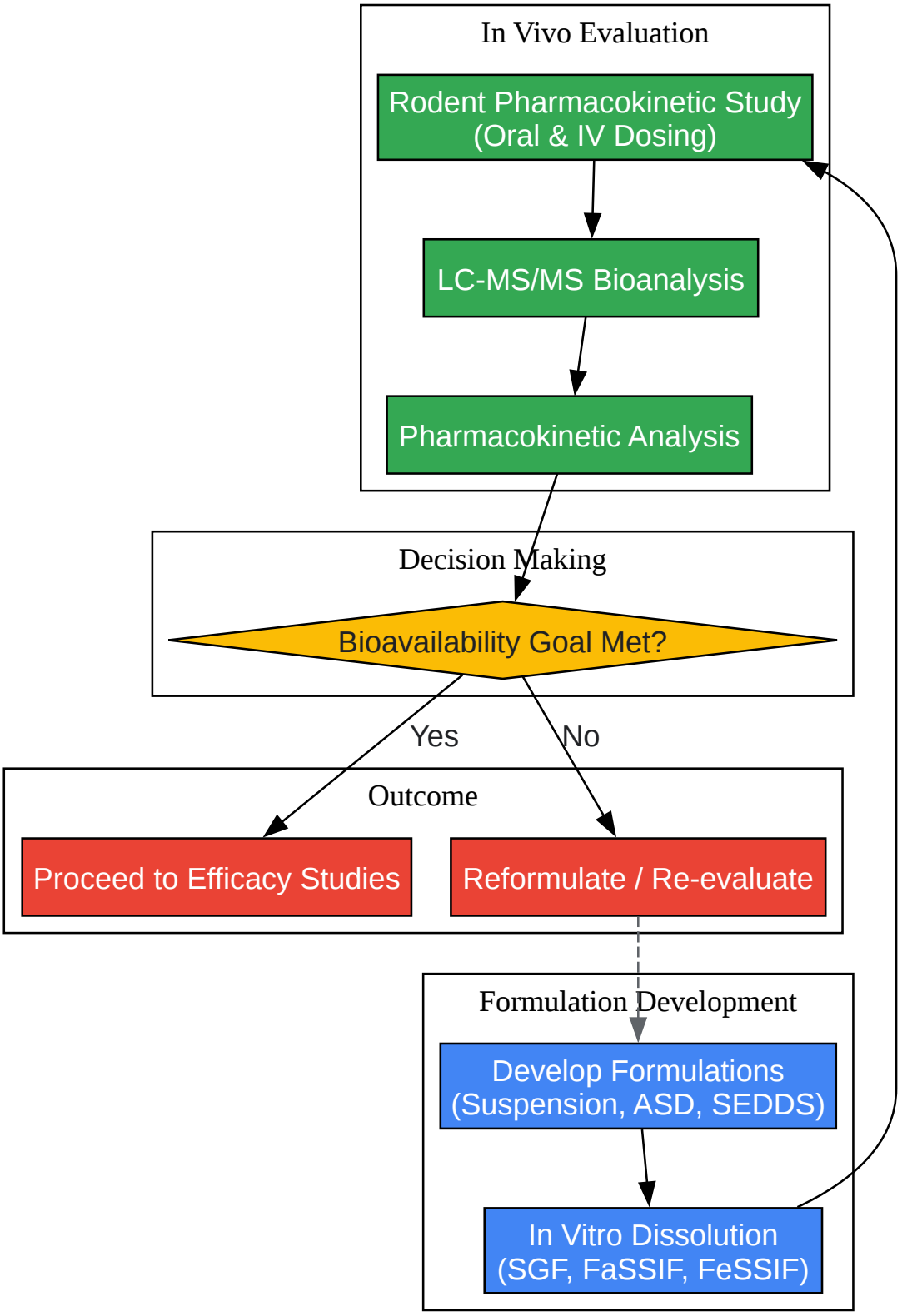

Click to download full resolution via product page

© 2026 BenchChem. All rights reserved.

Caption: Workflow for the development and evaluation of formulations to improve bioavailability.

Troubleshooting Logic for Low Bioavailability

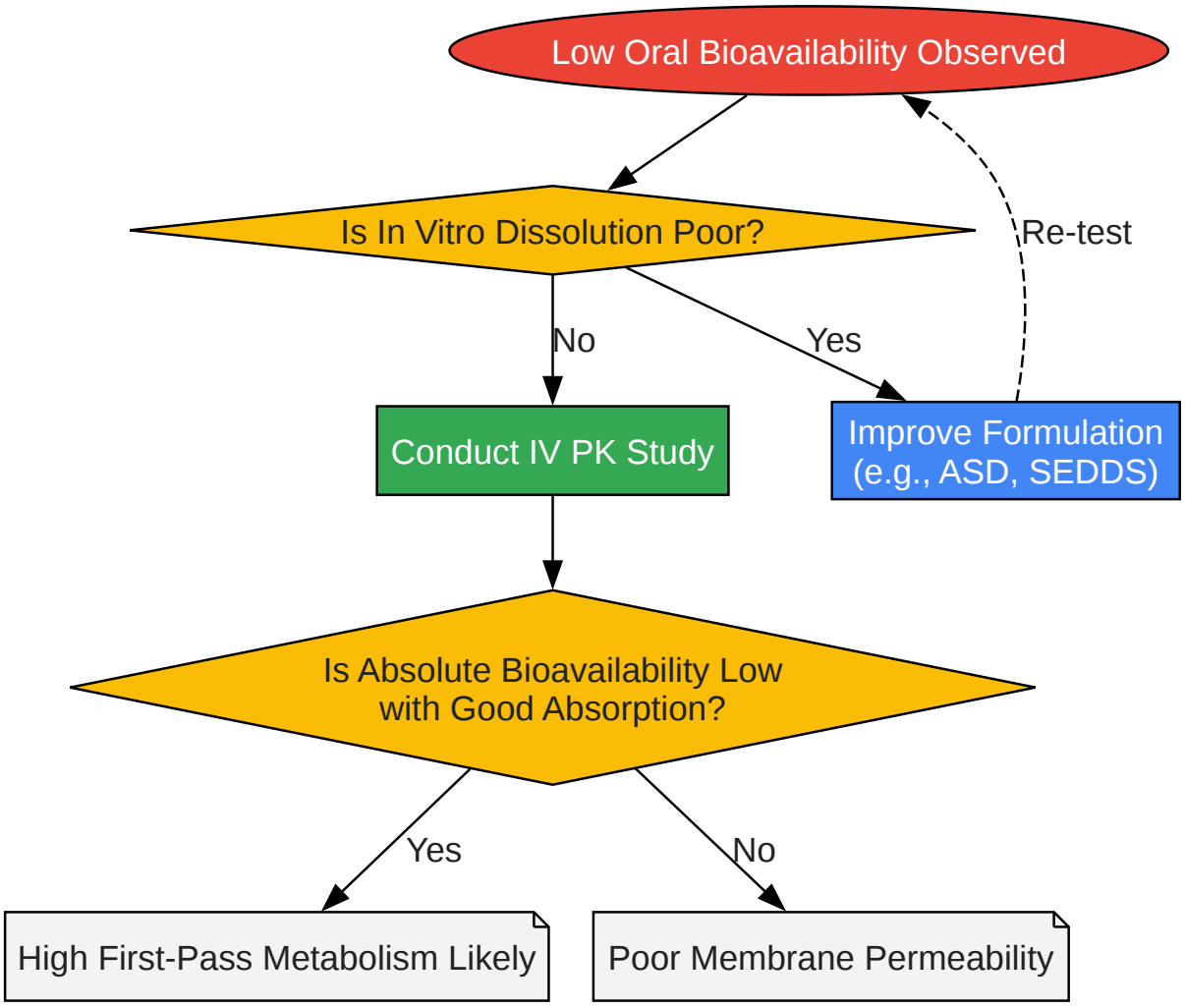

Click to download full resolution via product page

Caption: A logical approach to troubleshooting low oral bioavailability of EGFR inhibitors.

Need Custom Synthesis?

BenchChem offers custom synthesis for rare earth carbides and specific isotopiclabeling.

Email: info@benchchem.com or Request Quote Online.

References

- 1. researchgate.net [researchgate.net]
- 2. Practical Recommendations for the Manipulation of Kinase Inhibitor Formulations to Age-Appropriate Dosage Forms - PMC [pmc.ncbi.nlm.nih.gov]
- 3. researchgate.net [researchgate.net]
- 4. Considering the Oral Bioavailability of Protein Kinase Inhibitors: Essential in Assessing the Extent of Drug-Drug Interaction and Improving Clinical Practice - PubMed [pubmed.ncbi.nlm.nih.gov]
- 5. Formulation Strategies for Poorly Soluble Drugs [worldpharmatoday.com]
- 6. pubs.acs.org [pubs.acs.org]

- To cite this document: BenchChem. [Technical Support Center: Enhancing the Bioavailability of EGFR-IN-18]. BenchChem, [2026]. [Online PDF]. Available at: [https://www.benchchem.com/product/b14764873/docs#technical-support-center-enhancing-the-bioavailability-of-egfr-in-18]

Disclaimer & Data Validity:

The information provided in this document is for Research Use Only (RUO) and is strictly not intended for diagnostic or therapeutic procedures. While BenchChem strives to provide accurate protocols, we make no warranties, express or implied, regarding the fitness of this product for every specific experimental setup.

Technical Support: The protocols provided are for reference purposes. Unsure if this reagent suits your experiment?

Need Industrial/Bulk Grade? Request Custom Synthesis Quote

© 2026 BenchChem. All rights reserved.

BenchChem

Our mission is to be the trusted global source of essential and advanced chemicals, empowering scientists and researchers to drive progress in science and industry.

Contact

Address: 3281 E Guasti Rd

Ontario, CA 91761, United States

Phone: (601) 213-4426

Email: info@benchchem.com

Contact our Ph.D. Support Team for a compatibility check

© 2026 BenchChem. All rights reserved.