Sequence-Dependent Fluorescence Variation in Sulfo-Cy3 dUTP Probes

Author: BenchChem Technical Support Team. **Date**: April 2026

Compound of Interest

Compound Name:	*Sulfo-Cyanine3 dUTP*
Cat. No.:	*B14755375*

Get Quote

Executive Summary

In high-precision genomic applications—such as microarray analysis, Fluorescence in situ Hybridization (FISH), and quantitative PCR—the assumption that fluorescence intensity correlates linearly with probe abundance is critical. However, Sulfo-Cy3 dUTP, a widely used fluorophore-nucleotide conjugate, exhibits significant sequence-dependent fluorescence variation.

This guide dissects the biophysical mechanisms driving this variation (up to 50–65% intensity deviation based on local sequence context) and objectively compares Sulfo-Cy3 against superior alternatives like Alexa Fluor 555 and DyLight 550. We provide experimental protocols to validate probe performance and mitigation strategies to ensure data integrity.

Mechanistic Insight: The "Tug-of-War" Effect

The fluorescence of Cyanine 3 (Cy3) and its sulfonated derivative (Sulfo-Cy3) is governed by two competing photophysical processes when attached to DNA. Understanding this duality is essential for interpreting signal variance.

The Mechanism

© 2026 BenchChem. All rights reserved.

- Fluorescence Enhancement (Steric Restriction): Free Cy3 in solution has a low quantum yield (~0.04) because it dissipates energy via cis-trans isomerization around its polymethine bridge.[1] When conjugated to DNA, the dye can "stack" onto the terminal base pairs (acting like an additional base).[2][3][4] This stacking restricts rotation, forcing the dye into a rigid, fluorescent state. Purines (A, G) promote this stacking more effectively than pyrimidines (C, T).

- Fluorescence Quenching (Photoinduced Electron Transfer - PET): Conversely, Guanine (G) is the most oxidizable base. If the dye is in close proximity to a G residue, an excited-state electron transfer can occur from the Guanine to the dye, non-radiatively quenching the fluorescence.

The Result: A sequence-dependent "tug-of-war."

- Poly-A tracts: High fluorescence (Strong stacking, no PET).

- Poly-G tracts: Unpredictable. High stacking potential (enhancement) fights against high PET potential (quenching).

- Poly-C/T tracts: Low fluorescence (Weak stacking, dye remains flexible).

Visualization of the Mechanism

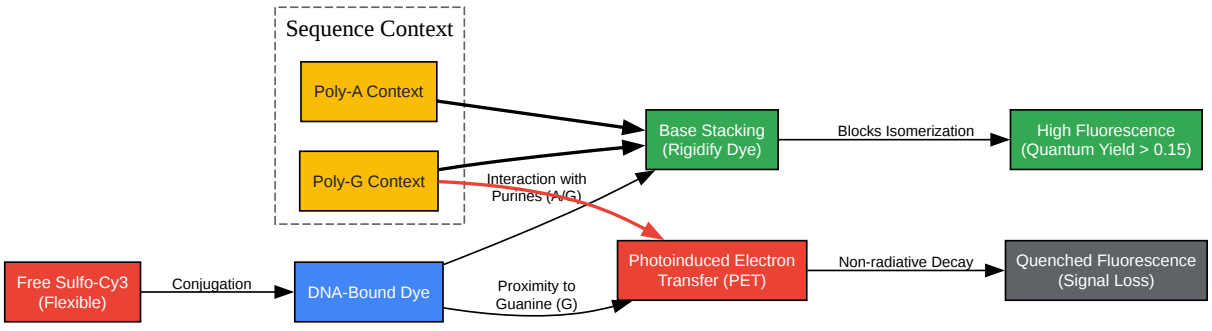

Click to download full resolution via product page

© 2026 BenchChem. All rights reserved.

Caption: Figure 1. The dual mechanism of Cy3 fluorescence modulation. Stacking enhances signal by rigidifying the dye, while PET from Guanine quenches it.

Comparative Analysis: Sulfo-Cy3 vs. Alternatives

Performance Metrics

The following data synthesizes findings from key photophysical studies (Somoza et al., PLOS ONE; Levitus et al., J. Phys. Chem. B) comparing Sulfo-Cy3 with next-generation alternatives.

Feature	Sulfo-Cy3 dUTP	Alexa Fluor 555 dUTP	DyLight 550 dUTP
Sequence Sensitivity	High (Up to 65% variation)	Low (Minimal variation)	Moderate (~45% variation)
Primary Artifact	G-Quenching & C-Dimming	Minimal	Similar to Cy3 but dampened
Photostability	Moderate	High (Resistant to bleaching)	High
Ozone Sensitivity	Moderate (Cy5 is worse, but Cy3 is affected)	Low (Ozone-resistant)	Low
Labeling Efficiency	4–9 dyes / 1000 bases (Direct)	High (Often used Indirectly)	High
Mechanism	Rigid polymethine bridge	Structurally rigid core	Modified polymethine

Direct vs. Indirect Labeling

The method of incorporation significantly affects the final data quality regarding sequence dependence.

- Direct Enzymatic Incorporation (Sulfo-Cy3 dUTP): Polymerases (e.g., Taq, Klenow) often exhibit bias against bulky fluorophore-modified nucleotides. This can lead to lower incorporation rates in GC-rich regions, compounding the fluorescence quenching issues.

© 2026 BenchChem. All rights reserved.

- Indirect Labeling (Amino-Allyl dUTP): A small, steric-free amino-allyl dUTP is incorporated first. The fluorophore (NHS-ester) is chemically coupled post-synthesis. This eliminates polymerase bias but does not eliminate sequence-dependent fluorescence quenching, as the dye still interacts with the local bases after coupling.

Experimental Validation Protocol

Objective: Determine the "Quenching Factor" of your specific Sulfo-Cy3 dUTP lot against a reference standard.

Materials

- Control Oligo A (Bright): 5'-[Amino-Mod]-AAA AAA AAA AAA-3'
- Test Oligo G (Quenched): 5'-[Amino-Mod]-GGG GGG GGG GGG-3'
- Test Oligo C (Dim): 5'-[Amino-Mod]-CCC CCC CCC CCC-3'
- Sulfo-Cy3 NHS Ester (to simulate post-labeling environment) or Sulfo-Cy3 dUTP (for enzymatic test).
- Spectrofluorometer (Ex: 550 nm / Em: 570 nm).

Workflow (Self-Validating)

- Standardization: Dilute all oligos to exactly 10 µM (verify by A260).
- Labeling:
  - If testing dUTP: Perform a primer extension assay using Klenow exo- on a template complementary to the oligos.
  - If testing dye-oligo interaction: Conjugate NHS-ester dye to the 5' amino group of each oligo. Purify via HPLC or spin column to remove free dye.
- Normalization: Measure A552 (dye absorbance) for all three conjugates. Dilute samples so they have identical A552 absorbance (e.g., 0.1 AU). This ensures equal dye concentration.
- Fluorescence Measurement: Measure emission at 570 nm.

© 2026 BenchChem. All rights reserved.

- Calculation:

Expected Result: For Sulfo-Cy3, the Poly-A signal should be 2–3x higher than Poly-C, and significantly different from Poly-G depending on the specific stacking geometry. Alexa Fluor 555 should show <20% variance.

Validation Workflow Diagram

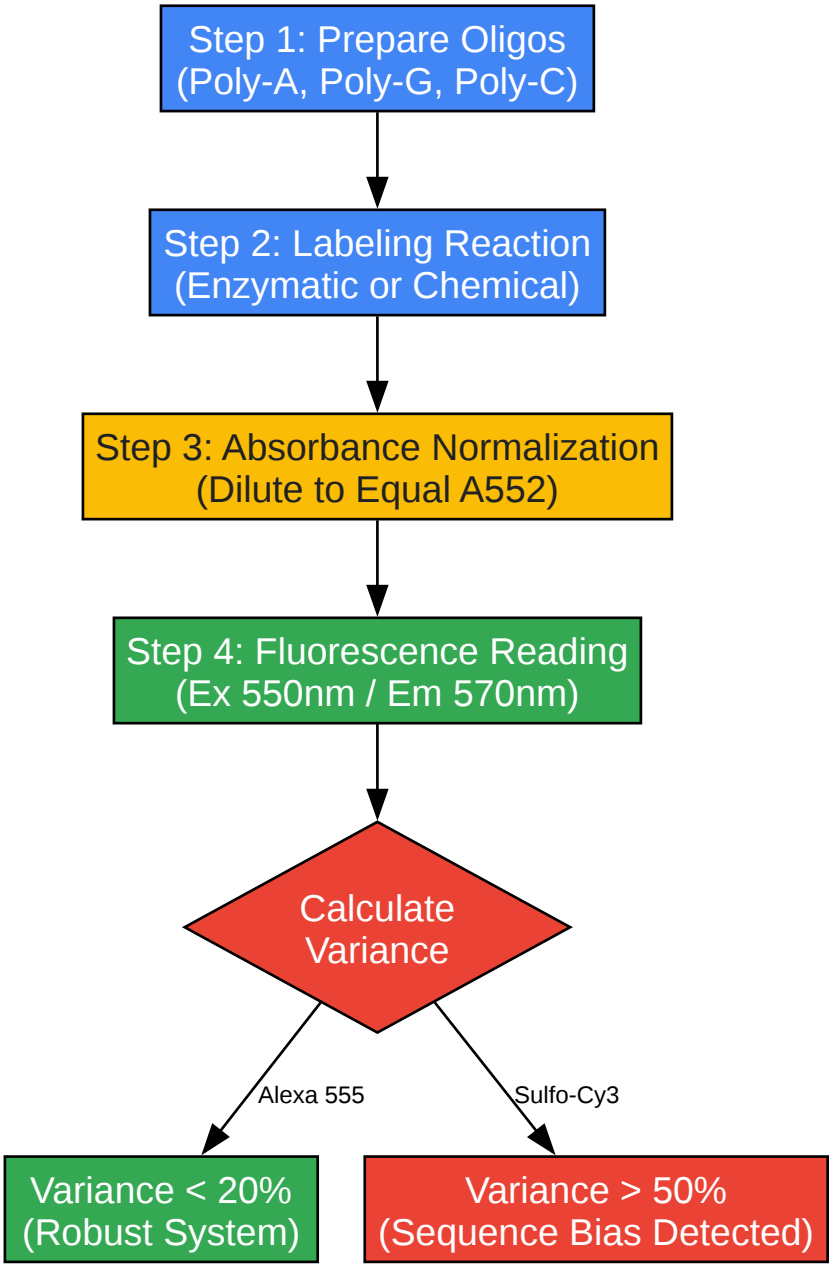

Click to download full resolution via product page

Caption: Figure 2. Step-by-step validation workflow to quantify sequence-dependent fluorescence bias.

Mitigation & Recommendations

When to use Sulfo-Cy3 dUTP

- Cost-Sensitive Screens: When budget constraints outweigh the need for <10% quantitative precision.
- Legacy Protocols: When reproducing data from older studies (pre-2010) where Cy3 was the standard.
- Qualitative Imaging: High-contrast cellular imaging where absolute intensity quantification is not the primary output.

When to Switch (Alternatives)

- Quantitative Microarrays/qPCR: Use Alexa Fluor 555 or DyLight 550. The reduction in sequence bias eliminates "false fold-changes" caused by GC-content differences between genes.
- Single-Molecule Studies: Use Cy3B (rigidified variant) or Alexa 555 to avoid fluctuations in photon counts due to dye blinking/isomerization.

Data Correction Strategy

If you must use Sulfo-Cy3 dUTP for quantitative work:

- LOESS Normalization: Apply intensity-dependent normalization (Lowess) during microarray analysis.
- Dye-Swap: Perform replicate experiments swapping Cy3 and Cy5 (or Cy3 and Alexa 647) to average out dye-specific sequence biases.

References

- Kretschy, N., & Somoza, M. M. (2014). Comparison of the Sequence-Dependent Fluorescence of the Cyanine Dyes Cy3, Cy5, DyLight DY547 and DyLight DY647 on Single-

© 2026 BenchChem. All rights reserved.

Stranded DNA.[5] PLOS ONE. [Link]

- Kekić, T., & Lietard, J. (2022). Sequence-dependence of Cy3 and Cy5 dyes in 3' terminally-labeled single-stranded DNA.[6] Scientific Reports. [Link]
- Harvey, B. J., et al. (2009). DNA sequence-dependent enhancement of Cy3 fluorescence. Photochemical & Photobiological Sciences. [Link]
- Sanborn, M. E., et al. (2007). Fluorescence properties and photophysics of the sulfoindocyanine Cy3 linked covalently to DNA. The Journal of Physical Chemistry B. [Link]

Need Custom Synthesis?

BenchChem offers custom synthesis for rare earth carbides and specific isotopiclabeling.

Email: info@benchchem.com or Request Quote Online.

Sources

- 1. Sequence-Dependent Fluorescence of Cyanine Dyes on Microarrays | PLOS One [journals.plos.org]
- 2. Cy3-DNA Stacking Interactions Strongly Depend on the Identity of the Terminal Basepair - PMC [pmc.ncbi.nlm.nih.gov]
- 3. researchgate.net [researchgate.net]
- 4. Time-Resolved Fluorescence Detection of Nicked DNA via Site-Specific Stacking of Sulfo-Cy3: The Role of Charge, Polarity, Linker, and Sequence Context - PMC [pmc.ncbi.nlm.nih.gov]
- 5. Comparison of the Sequence-Dependent Fluorescence of the Cyanine Dyes Cy3, Cy5, DyLight DY547 and DyLight DY647 on Single-Stranded DNA | PLOS One [journals.plos.org]
- 6. Sequence-dependence of Cy3 and Cy5 dyes in 3′ terminally-labeled single-stranded DNA - PMC [pmc.ncbi.nlm.nih.gov]
- To cite this document: BenchChem. [Sequence-Dependent Fluorescence Variation in Sulfo-Cy3 dUTP Probes]. BenchChem, [2026]. [Online PDF]. Available at: [https://www.benchchem.com/product/b14755375/docs#sequence-dependent-fluorescence-variation-in-sulfo-cy3-dutp-probes]

© 2026 BenchChem. All rights reserved.

Disclaimer & Data Validity:

The information provided in this document is for Research Use Only (RUO) and is strictly not intended for diagnostic or therapeutic procedures. While BenchChem strives to provide accurate protocols, we make no warranties, express or implied, regarding the fitness of this product for every specific experimental setup.

Technical Support: The protocols provided are for reference purposes. Unsure if this reagent suits your experiment?

Need Industrial/Bulk Grade? Request Custom Synthesis Quote

BenchChem

Our mission is to be the trusted global source of essential and advanced chemicals, empowering scientists and researchers to drive progress in science and industry.

Contact

Address: 3281 E Guasti Rd

Ontario, CA 91761, United States

Phone: (601) 213-4426

Email: info@benchchem.com

Contact our Ph.D. Support Team for a compatibility check

© 2026 BenchChem. All rights reserved.