Technical Guide: 2-Bromo-N,N-dimethylpropanamide as an Alkylating Agent

Author: BenchChem Technical Support Team. **Date**: May 2026

Compound of Interest	
Compound Name:	*2-Bromo-N,N-dimethylpropanamide*
CAS No.:	*54537-47-2*
Cat. No.:	*B146678*

Get Quote

Part 1: Introduction & Chemical Profile

2-Bromo-N,N-dimethylpropanamide is a bifunctional reagent characterized by an electrophilic

-carbon and a stable dimethylamide moiety. While historically categorized strictly as an alkylating agent for nucleophilic substitution (

), recent developments in photoredox catalysis have elevated its status as a radical precursor for constructing complex heterocycles.

This guide addresses the two primary distinct reactivity modes of this compound:

- Classical Alkylation: Introduction of the N,N-dimethylpropanamide motif into amines, thiols, and phenols.
- Radical Cascade Cyclization: Utilization as a tertiary carbon radical source in the synthesis of phenanthridines and oxindoles.

© 2026 BenchChem. All rights reserved.

Chemical Specifications

Property	Data
CAS Number	54537-47-2
Formula	ngcontent-ng-c1989010908="" _nghost-ng-c3017681703="" class="inline ng-star-inserted">
Molecular Weight	180.04 g/mol
Appearance	Colorless to pale yellow liquid (or low-melting solid)
Boiling Point	~95-100 °C at 10 mmHg (predicted)
Density	~1.39 g/cm^3
Solubility	Soluble in DCM, THF, DMF, Acetonitrile; limited water solubility.

Part 2: Safety & Handling (Critical)

Hazard Classification: Alkylating Agent, Corrosive, Lachrymator.

As an

-haloamide, this compound is a potent electrophile capable of alkylating DNA bases. Strict adherence to safety protocols is non-negotiable.

- Containment: All transfers must occur within a certified fume hood.
- PPE: Double nitrile gloves (0.11 mm minimum) or Silver Shield® gloves are required. Standard latex is permeable to this agent.
- Decontamination: Spills should be treated with a solution of 10% sodium thiosulfate and dilute sodium hydroxide to quench the alkylating potential by converting the bromide to the corresponding hydroxyl/thiol adduct.

Part 3: Mechanistic Insight

© 2026 BenchChem. All rights reserved.

The utility of **2-Bromo-N,N-dimethylpropanamide** stems from the activation provided by the adjacent carbonyl group. The carbonyl withdraws electron density, making the

-carbon highly susceptible to nucleophilic attack (

) and stabilizing the resulting radical species after homolytic cleavage (

).

Diagram 1: Dual Reactivity Pathways

The following diagram illustrates the bifurcation between classical nucleophilic substitution and modern radical chemistry.

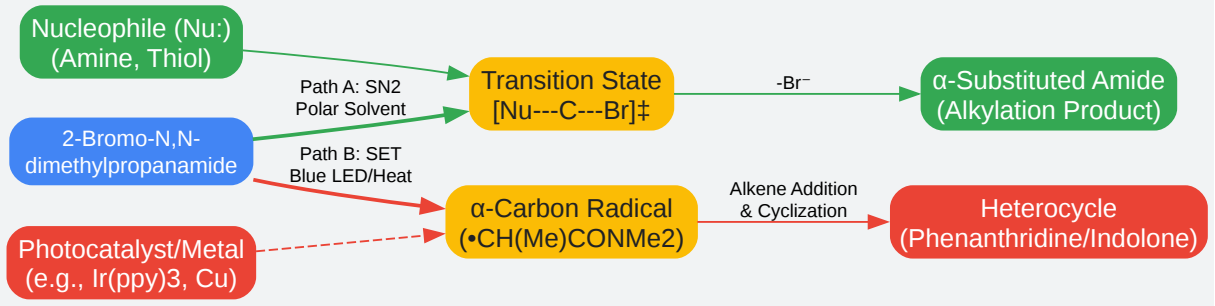

Click to download full resolution via product page

Caption: Figure 1. Divergent reaction pathways: Path A (Green) depicts classical

alkylation; Path B (Red) shows radical generation via Single Electron Transfer (SET).

Part 4: Application Protocols

Protocol A: N-Alkylation of Secondary Amines

Objective: Synthesis of

-amino amides. This motif is structurally homologous to local anesthetics (e.g., lidocaine derivatives) and is a common intermediate in peptidomimetic synthesis.

Rationale:

© 2026 BenchChem. All rights reserved.

- Solvent: Acetonitrile (MeCN) is chosen for its polarity, which stabilizes the transition state, and its non-nucleophilic nature.
- Base: Potassium Carbonate (

) serves as an acid scavenger (HBr) without being strong enough to cause significant elimination or epimerization.
- Catalyst: Potassium Iodide (KI) is used to generate the in situ iodo-analog (Finkelstein reaction), which is a superior electrophile (

  is a better leaving group than

).

Materials

- Substrate: Secondary Amine (1.0 equiv)
- Reagent: **2-Bromo-N,N-dimethylpropanamide** (1.1 equiv)
- Base:

  (anhydrous, 2.0 equiv)
- Additive: KI (0.1 equiv)
- Solvent: MeCN (anhydrous, 0.2 M concentration relative to substrate)

Step-by-Step Methodology

- Preparation: In a flame-dried round-bottom flask equipped with a magnetic stir bar, suspend

  (2.0 equiv) and KI (0.1 equiv) in anhydrous MeCN.
- Addition: Add the secondary amine (1.0 equiv) to the suspension. Stir for 5 minutes at Room Temperature (RT).
- Alkylation: Add **2-Bromo-N,N-dimethylpropanamide** (1.1 equiv) dropwise via syringe.
  - Note: If the reaction is exothermic, cool to 0°C during addition, then warm to RT.

© 2026 BenchChem. All rights reserved.

- Reaction: Heat the mixture to 60°C under an inert atmosphere (

  or Ar). Monitor by TLC or LC-MS.

  - Typical conversion time: 4–12 hours.

- Workup:

  - Cool to RT. Filter off the inorganic solids (

    /KBr) through a Celite pad.

  - Concentrate the filtrate under reduced pressure.[1][2]

  - Dissolve residue in Ethyl Acetate (EtOAc) and wash with water (x2) and brine (x1).

- Purification: Dry organic layer over

  , filter, and concentrate. Purify via flash column chromatography (Hexanes/EtOAc gradient).

Protocol B: Photoredox Cascade Synthesis of Phenanthridines

Objective: Use of **2-Bromo-N,N-dimethylpropanamide** as a radical precursor to synthesize phenanthridines from N-arylacrylamides. This represents a modern "atom-economic" application.

Mechanistic Logic: The reagent undergoes homolytic cleavage of the C-Br bond facilitated by a photocatalyst. The resulting radical adds to the alkene of the N-arylacrylamide, triggering a cascade cyclization onto the aromatic ring.

Materials

- Substrate: N-arylacrylamide (e.g., N-phenylmethacrylamide) (0.2 mmol)
- Reagent: **2-Bromo-N,N-dimethylpropanamide** (3.0 equiv)
- Catalyst:

© 2026 BenchChem. All rights reserved.

(2 mol%)[3]

- Base:

  (2.0 equiv)

- Solvent: DMSO/MeCN (1:1 ratio, degassed)

- Light Source: 5W Blue LED (

  nm)

Step-by-Step Methodology

- Setup: In a 10 mL Pyrex tube, combine the N-arylacrylamide, **2-Bromo-N,N-dimethylpropanamide**,

  , and

  .

- Solvent & Degassing: Add the DMSO/MeCN mixture. Seal the tube with a septum. Degas the solution by sparging with Argon for 15 minutes (oxygen quenches the radical species).

- Irradiation: Place the tube approximately 2–3 cm from the Blue LED source. Stir vigorously. Use a fan to maintain the reaction temperature near RT (prevent overheating from the LED).

- Monitoring: Irradiate for 24–32 hours. Monitor consumption of the acrylamide by TLC.

- Workup: Dilute with water and extract with EtOAc (x3). The DMSO must be thoroughly washed out to prevent streaking during chromatography.

- Purification: Silica gel chromatography.

Diagram 2: Experimental Workflow (Protocol A)

© 2026 BenchChem. All rights reserved.

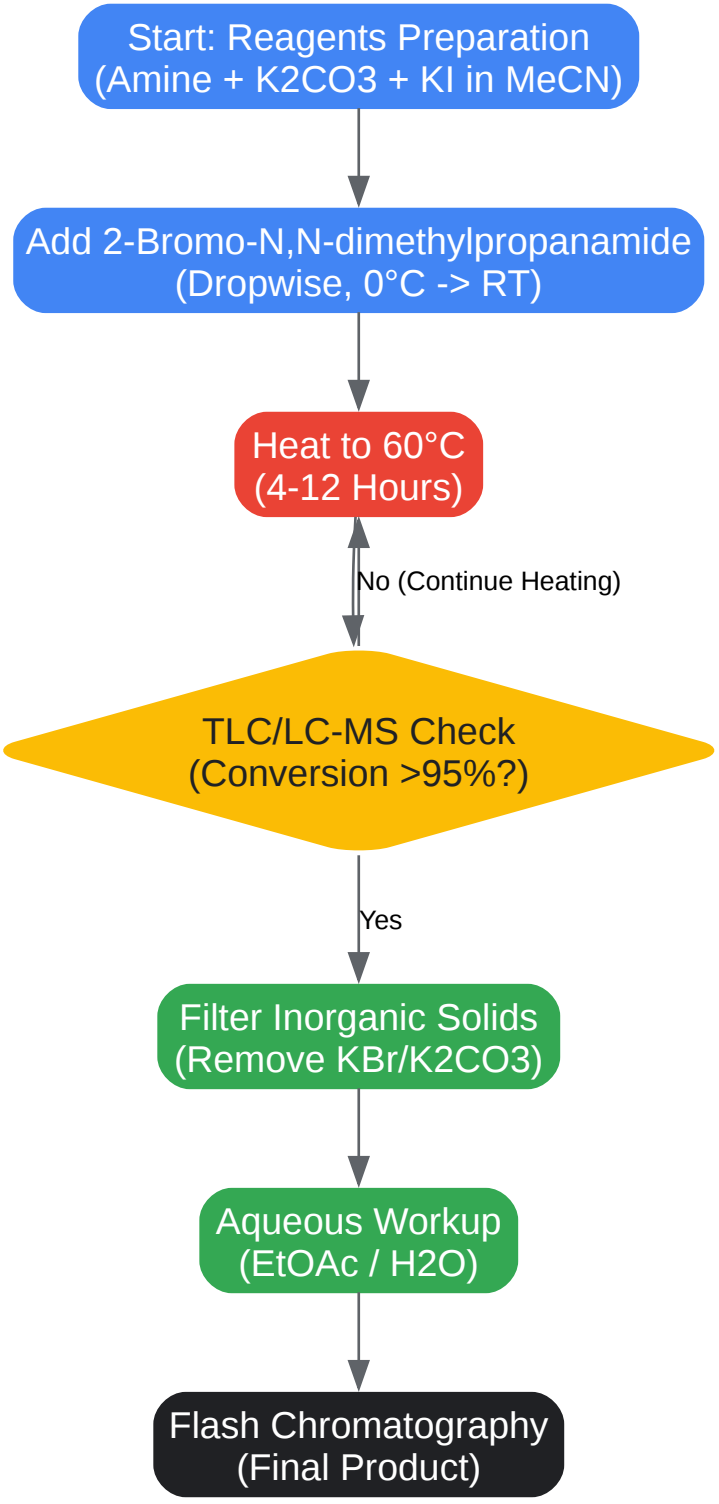

Click to download full resolution via product page

Caption: Figure 2.[4][5][6] Step-by-step workflow for the N-alkylation protocol, ensuring removal of inorganic byproducts before purification.

© 2026 BenchChem. All rights reserved.

Part 5: Troubleshooting & Optimization

Issue	Probable Cause	Corrective Action
Low Conversion	Steric hindrance of amine	Switch solvent to DMF (higher T) or use Cs_2CO_3 (solubility effect).
Elimination Byproduct	Basicity too high	Lower reaction temperature; switch base to $NaHCO_3$ or use a non-nucleophilic organic base (DIPEA).
Hydrolysis of Amide	Wet solvent/High pH	Ensure anhydrous conditions; avoid hydroxide bases (NaOH/KOH).
Coloration (Darkening)	Oxidation of amine	Degas solvents; perform reaction under strict Nitrogen atmosphere.

References

- EvitaChem.**2-Bromo-N,N-dimethylpropanamide** Product Profile and Applications. Retrieved from EvitaChem. Link
- BenchChem.2-Bromoacetamide synthesis and purification methods. (Analogous chemistry for alpha-bromoamides). Retrieved from BenchChem.[2][7] Link
- Yu, Yulan, et al. "Photoredox Synthesis of Phenanthridines using alpha-bromoamides."[3] The Journal of Organic Chemistry, 82.15 (2017): 8148-8156.[3] (Describes the radical cascade mechanism). Link
- PubChem.Compound Summary: **2-Bromo-N,N-dimethylpropanamide** (CID 11367348). National Library of Medicine. Link
- Wang, Mindan, et al. "Derivatization of bio-aminothiols using 2-Bromo-N,N-dimethylacetamide."[3] Journal of Chromatography A, 1740 (2025).[3] (Demonstrates thiol-specific alkylation utility). Link[3]

© 2026 BenchChem. All rights reserved.

Need Custom Synthesis?

BenchChem offers custom synthesis for rare earth carbides and specific isotopiclabeling.

Email: info@benchchem.com or Request Quote Online.

Sources

- 1. researchgate.net [researchgate.net]
- 2. pdf.benchchem.com [pdf.benchchem.com]
- 3. alfa-chemistry.com [alfa-chemistry.com]
- 4. 2-Bromo-N,N-dimethylpropanamide | C5H10BrNO | CID 11367348 - PubChem [pubchem.ncbi.nlm.nih.gov]
- 5. US3402203A - Process of preparing n, n-dimethylamino alcohols - Google Patents [patents.google.com]
- 6. Propanamide, N,N-dimethyl- | C5H11NO | CID 12965 - PubChem [pubchem.ncbi.nlm.nih.gov]
- 7. pdf.benchchem.com [pdf.benchchem.com]
- To cite this document: BenchChem. [Technical Guide: 2-Bromo-N,N-dimethylpropanamide as an Alkylating Agent]. BenchChem, [2026]. [Online PDF]. Available at: [https://www.benchchem.com/product/b146678/docs#technical-guide-2-bromo-n-n-dimethylpropanamide-as-an-alkylating-agent]

Disclaimer & Data Validity:

The information provided in this document is for Research Use Only (RUO) and is strictly not intended for diagnostic or therapeutic procedures. While BenchChem strives to provide accurate protocols, we make no warranties, express or implied, regarding the fitness of this product for every specific experimental setup.

Technical Support: The protocols provided are for reference purposes. Unsure if this reagent suits your experiment?

Need Industrial/Bulk Grade? Request Custom Synthesis Quote

BenchChem

Our mission is to be the trusted global source of essential and advanced chemicals, empowering scientists and researchers to drive progress in science and industry.

Contact

Address: 3281 E Guasti Rd

Ontario, CA 91761, United States

Phone: (601) 213-4426

Email: info@benchchem.com

Contact our Ph.D. Support Team for a compatibility check

© 2026 BenchChem. All rights reserved.