Application Note: Strategic Utilization of 8-Chloroquinazolin-2-amine in Medicinal Chemistry

Author: BenchChem Technical Support Team. **Date**: May 2026

Compound of Interest	
Compound Name:	*8-Chloroquinazolin-2-amine*
CAS No.:	*1185113-73-8*
Cat. No.:	*B1451550*

Get Quote

Executive Summary & Pharmacological Significance[1][2][3]

The **8-chloroquinazolin-2-amine** scaffold represents a privileged pharmacophore in modern drug discovery, particularly within the realm of kinase inhibitors (e.g., FLT3, EGFR, WEE1) and targeted protein degradation (PROTACs).[1]

While the quinazoline core is ubiquitous in medicinal chemistry, the specific introduction of a chlorine atom at the C8 position confers distinct physicochemical and biological advantages:

- Metabolic Blockade: The C8 position is a common site for metabolic oxidation (hydroxylation) by Cytochrome P450 enzymes.[1] Chlorination sterically and electronically blocks this "soft spot," significantly enhancing the metabolic stability (t1/2) of the parent molecule.[1]
- Electronic Modulation: The inductive electron-withdrawing nature (-I effect) of the chlorine atom reduces the electron density of the benzene ring.[1] This subtly modulates the pKa of

© 2026 BenchChem. All rights reserved.

the N1/N3 nitrogens, influencing hydrogen bond strength with hinge-region residues in kinase ATP pockets.[1]

- Lipophilic Targeting: The 8-Cl substituent often occupies specific hydrophobic pockets (e.g., the "gatekeeper" or solvent-front regions) in target proteins, improving potency via halogen bonding or Van der Waals interactions.[1]

This guide details the validated synthesis, functionalization, and application of this critical intermediate.[1]

Chemical Profile & Reactivity[1][2][3][4][5][6]

Property	Specification
IUPAC Name	8-Chloroquinazolin-2-amine
CAS Number	1185113-73-8
Molecular Formula	$C_8H_6ClN_3$
Molecular Weight	179.61 g/mol
Appearance	Light yellow to off-white solid
Solubility	Soluble in DMSO, DMAC, DMF; sparingly soluble in MeOH; insoluble in water.[1]
pKa (Calc)	~3.5 (N1 protonation), ~13 (Amine deprotonation)

Reactivity Hotspots

- Exocyclic Amine (C2-NH_2): A weak nucleophile.[1] It participates in Buchwald-Hartwig cross-couplings or amide couplings but often requires forcing conditions or palladium catalysis due to the electron-deficient pyrimidine ring.[1]

- C4 Position: Although unsubstituted in the parent scaffold, this position is susceptible to oxidative activation or nucleophilic attack if pre-functionalized (e.g., via a 4-chloro intermediate).[1]

© 2026 BenchChem. All rights reserved.

- C8-Chlorine: Generally stable under standard conditions.[1] It serves as a structural anchor rather than a reactive handle, though it can undergo palladium-catalyzed dehalogenation if not carefully managed.[1]

Validated Synthesis Protocol

The most robust route to **8-chloroquinazolin-2-amine** utilizes a cascade SNAr / Condensation strategy starting from 3-chloro-2-fluorobenzaldehyde.[1] This method is superior to the anthranilamide route as it avoids the formation of the thermodynamic "one" (keto) byproduct and directly yields the amine.[1]

Protocol A: Cascade Cyclization

Mechanism: Guanidine acts as a dual nucleophile.[1] It first displaces the labile fluorine (activated by the ortho-formyl group) and subsequently condenses with the aldehyde to close the pyrimidine ring.[1]

Materials

- Precursor: 3-Chloro-2-fluorobenzaldehyde [CAS: 85089-31-2][1]
- Reagent: Guanidine Carbonate (2.0 - 4.0 equiv.)[1]
- Solvent: Dimethylacetamide (DMAc) or DMF (Anhydrous)[1]
- Workup: Ice water, Methanol.[1]

Step-by-Step Procedure

- Setup: Charge a dried reaction vessel (pressure tube or round-bottom flask) with 3-chloro-2-fluorobenzaldehyde (1.0 equiv, e.g., 3.02 g).
- Solvation: Add DMAc (3-5 volumes, e.g., 10-15 mL). Stir to dissolve.
- Reagent Addition: Add Guanidine Carbonate (4.0 equiv). Note: Excess guanidine ensures complete displacement of the fluorine.[1]
- Reaction: Heat the mixture to 140°C under an inert atmosphere (N_2) for 3–4 hours.

© 2026 BenchChem. All rights reserved.

- Checkpoint: Monitor by TLC (Hexane:EtOAc 1:1) or LCMS.[1] The aldehyde peak should disappear, and a lower Rf spot (amine) should appear.[1]

- Quench & Isolation:
  - Cool the reaction mixture to room temperature.
  - Pour the dark reaction mixture slowly into ice-cold water (10 volumes). Stir vigorously for 30 minutes. The product will precipitate as a solid.[1]
- Purification:
  - Filter the solid under vacuum.[1]
  - Wash: Wash the cake with copious water to remove residual guanidine and DMAc.[1]
  - Trituration: Suspend the wet cake in refluxing Methanol (small volume) for 30 minutes, then cool and filter. This removes sticky oligomeric impurities.[1]
  - Drying: Dry in a vacuum oven at 50°C overnight.

Yield: Typical isolated yields range from 75% to 85%.[1]

Visualization: Synthesis Workflow

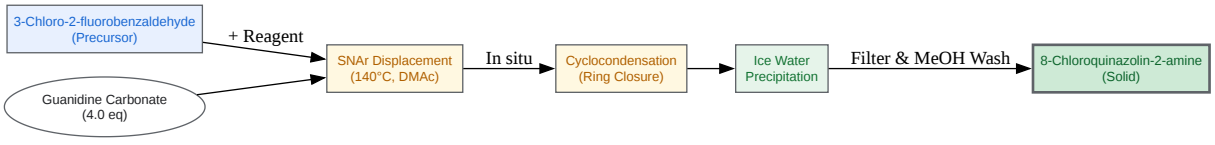

Click to download full resolution via product page

Caption: One-pot cascade synthesis of **8-chloroquinazolin-2-amine** via SNAr and cyclocondensation.

Medicinal Chemistry Applications

© 2026 BenchChem. All rights reserved.

A. Kinase Inhibition (FLT3 & EGFR)

In the design of covalent inhibitors (e.g., for FLT3-ITD mutations in AML), the 2-amino group serves as the attachment point for the "warhead" or the hinge-binding motif.[1]

- Strategy: The 2-amino group is coupled with an aryl halide or aldehyde to extend the molecule into the solvent channel.[1]
- Role of 8-Cl: In FLT3 inhibitors, the 8-phenyl or 8-chloro substituent fills the hydrophobic pocket near the gatekeeper residue (Cys828), improving selectivity against other kinases.[1]

B. Targeted Protein Degradation (WEE1 Degraders)

Recent patent literature (WO2024006881) highlights **8-chloroquinazolin-2-amine** as a key intermediate for WEE1 degraders.[1]

- Mechanism: The quinazoline core binds to the WEE1 kinase domain.[1] A linker is attached (often via the C6 or C7 position, requiring a brominated starting material like 2-amino-5-bromo-3-chlorobenzaldehyde), connecting it to an E3 ligase ligand (e.g., Cereblon).[1]
- Protocol Adaptation: If C6-functionalization is required, start the synthesis with 2-amino-5-bromo-3-chlorobenzaldehyde instead of the fluoro-analog. The 8-Cl remains crucial for WEE1 affinity.[1]

C. Functionalization Protocol: Buchwald-Hartwig Coupling

To functionalize the exocyclic amine (e.g., adding an aryl group):

- Reagents: **8-Chloroquinazolin-2-amine** (1.0 eq), Aryl Bromide (1.2 eq).
- Catalyst: $Pd_2(dba)_3$ (0.05 eq) + Xantphos (0.1 eq).
- Base: Cs_2CO_3 (2.0 eq).
- Conditions: 1,4-Dioxane, 100°C, 12h.

© 2026 BenchChem. All rights reserved.

- Note: The 8-Cl is generally stable under these conditions if the catalyst system is tuned for the more reactive Aryl Bromide.[1]

Structural Logic & SAR Visualization

The following diagram illustrates the Structure-Activity Relationship (SAR) logic for this scaffold.

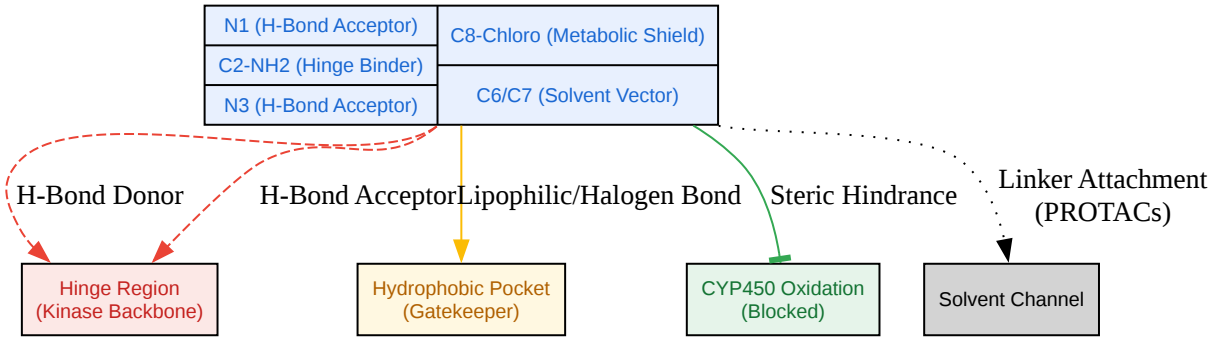

Click to download full resolution via product page

Caption: Pharmacophore mapping of **8-chloroquinazolin-2-amine** in kinase active sites.

References

- Synthesis of **8-Chloroquinazolin-2-amine** (Patent)
  - Title: Quinazoline compound, intermediate thereof, preparation method, pharmaceutical composition and application.[1][2]
  - Source: CN113999180A (2022).[1]
  - URL
- Application in WEE1 Degraders (Patent)
  - Title: WEE1 Degrading Compounds and Uses Thereof.[1]
  - Source: WO2024006881A1 (2024).[1]

© 2026 BenchChem. All rights reserved.

- URL

- FLT3 Covalent Inhibitors (Journal)
  - Title: Design, synthesis and biological evaluation of 8-phenylquinazolin-2-amine deriv
  - Source: European Journal of Medicinal Chemistry (via PubMed/NIH).[1]
  - URL:[Link]
- General Quinazoline Scaffold Review
  - Title: Recent Advances on Quinazoline Derivatives: A Potential Bioactive Scaffold in Medicinal Chemistry.[1][3][4][2]
  - Source: Molecules (MDPI).[1]
  - URL:[Link][1]

Need Custom Synthesis?

BenchChem offers custom synthesis for rare earth carbides and specific isotopiclabeling.

Email: info@benchchem.com or Request Quote Online.

Sources

- 1. WO2024006881A1 - Wee1 degrading compounds and uses thereof - Google Patents [patents.google.com]
- 2. researchgate.net [researchgate.net]
- 3. Recent Advances on Quinazoline Derivatives: A Potential Bioactive Scaffold in Medicinal Chemistry | MDPI [mdpi.com]
- 4. scielo.br [scielo.br]
- To cite this document: BenchChem. [Application Note: Strategic Utilization of 8-Chloroquinazolin-2-amine in Medicinal Chemistry]. BenchChem, [2026]. [Online PDF]. Available at: [https://www.benchchem.com/product/b1451550/docs#application-note-strategic-utilization-of-8-chloroquinazolin-2-amine-in-medicinal-chemistry]

© 2026 BenchChem. All rights reserved.

Disclaimer & Data Validity:

The information provided in this document is for Research Use Only (RUO) and is strictly not intended for diagnostic or therapeutic procedures. While BenchChem strives to provide accurate protocols, we make no warranties, express or implied, regarding the fitness of this product for every specific experimental setup.

Technical Support: The protocols provided are for reference purposes. Unsure if this reagent suits your experiment?

Need Industrial/Bulk Grade? Request Custom Synthesis Quote

BenchChem

Our mission is to be the trusted global source of essential and advanced chemicals, empowering scientists and researchers to drive progress in science and industry.

Contact

Address: 3281 E Guasti Rd

Ontario, CA 91761, United States

Phone: (601) 213-4426

Email: info@benchchem.com

Contact our Ph.D. Support Team for a compatibility check

© 2026 BenchChem. All rights reserved.