Technical Guide: 3-Cyclopropylaminomethyl-benzoic acid methyl ester[1]

Author: BenchChem Technical Support Team. **Date**: April 2026

Compound of Interest

Compound Name:	*3-Cyclopropylaminomethyl-benzoic acid methyl ester*
CAS No.:	*1251566-95-6*
Cat. No.:	*B1449508*

Get Quote

Core Identity & Structural Analysis

Compound Name: Methyl 3-((cyclopropylamino)methyl)benzoate Common Identifier: **3-Cyclopropylaminomethyl-benzoic acid methyl ester** Molecular Formula: $C_{12}H_{15}NO_2$ Molecular Weight: 205.25 g/mol [1]

Chemical Identifiers

© 2026 BenchChem. All rights reserved.

Type	String / Value
SMILES	COC(=O)C1=CC=CC(CNC2CC2)=C1
InChI	InChI=1S/C12H15NO2/c1-15-12(14)10-5-3-4-9(8-10)7-13-11-2-6-11/h3-5,8,11,13H,2,6-7H2,1H3
InChIKey	Generated based on structure:ZKZKYWZKZKYW-UHFFFAOYSA-N (Hypothetical)
LogP (Calc)	~1.8 - 2.1
pKa (Calc)	~8.5 (Secondary amine)

Synthesis Protocols

The synthesis of **3-Cyclopropylaminomethyl-benzoic acid methyl ester** relies on the efficient installation of the secondary amine linkage.[1] The most robust industrial and laboratory route is Reductive Amination, preferred for its mild conditions and prevention of over-alkylation compared to direct alkylation methods.

Method A: Reductive Amination (Preferred)

This protocol utilizes Methyl 3-formylbenzoate and Cyclopropylamine with sodium triacetoxyborohydride (STAB) as the reducing agent.[1] STAB is chosen over $NaBH_4$ for its selectivity toward imines in the presence of esters.

Reagents & Stoichiometry

© 2026 BenchChem. All rights reserved.

Component	Equiv.	Role
Methyl 3-formylbenzoate	1.0	Electrophile (Core Scaffold)
Cyclopropylamine	1.1 - 1.2	Nucleophile
Sodium Triacetoxyborohydride (STAB)	1.4 - 1.5	Selective Reductant
Acetic Acid (AcOH)	1.0 - 2.0	Catalyst (Activates Imine)
1,2-Dichloroethane (DCE)	Solvent	0.1 - 0.2 M Conc.[1]

Step-by-Step Protocol

- Imine Formation:
  - Charge a flame-dried reaction vessel with Methyl 3-formylbenzoate (1.0 equiv) and anhydrous DCE (or DCM).
  - Add Cyclopropylamine (1.1 equiv) followed by Acetic Acid (1.0 equiv).
  - Stir at room temperature (20–25°C) for 1–2 hours under nitrogen atmosphere. Checkpoint: Monitor by TLC/LCMS for disappearance of aldehyde.
- Reduction:
  - Cool the mixture to 0°C.
  - Add STAB (1.4 equiv) portion-wise over 15 minutes to control mild exotherm.
  - Allow the reaction to warm to room temperature and stir for 12–16 hours.
- Workup:
  - Quench with saturated aqueous $NaHCO_3$ solution (pH ~8–9).[1]
  - Extract the aqueous layer with DCM (3x).
  - Wash combined organics with brine, dry over Na_2SO_4, and concentrate in vacuo.

© 2026 BenchChem. All rights reserved.

- Purification:
  - Purify via flash column chromatography (SiO_2).[1]
  - Eluent: Hexanes/Ethyl Acetate (gradient 10% → 40%) or DCM/MeOH (95:5) if polarity requires.[1]

Method B: Direct Alkylation (Alternative)

Note: Less preferred due to potential for bis-alkylation.[1]

- Reactants: Methyl 3-(bromomethyl)benzoate + Cyclopropylamine (excess).[1]
- Conditions: K_2CO_3, MeCN, 60°C.
- Critical Control: Use large excess of amine (3–5 equiv) to favor mono-alkylation.[1]

Applications in Drug Discovery

The 3-cyclopropylaminomethyl motif is a high-value pharmacophore, particularly in the development of epigenetic modulators and CNS-active agents.[1]

Epigenetic Modulation (LSD1 Inhibitors)

The cyclopropylamine moiety is a classic "warhead" for inhibiting Flavin-dependent amine oxidases, such as Lysine Specific Demethylase 1 (LSD1/KDM1A).[1]

- Mechanism: The enzyme oxidizes the C-N bond, generating a radical intermediate on the cyclopropyl ring. This radical attacks the FAD cofactor, forming a covalent adduct and irreversibly inhibiting the enzyme.
- Role of Benzoate: The methyl ester serves as a handle for further diversification (e.g., conversion to amides or hydroxamic acids) to engage the substrate-binding pocket of LSD1.[1]

Peptidomimetics

The rigid cyclopropyl group acts as a conformational lock, reducing the entropic penalty of binding compared to flexible alkyl chains. This is utilized in designing GPCR ligands where the

© 2026 BenchChem. All rights reserved.

amine interacts with a conserved aspartate residue.

Metabolic Stability

Cyclopropyl groups often resist P450-mediated dealkylation better than isopropyl or ethyl groups, extending the half-life (

) of the lead compound.[1]

Visualizations

Diagram 1: Reductive Amination Synthetic Pathway

This flow illustrates the conversion of the aldehyde precursor to the final secondary amine.

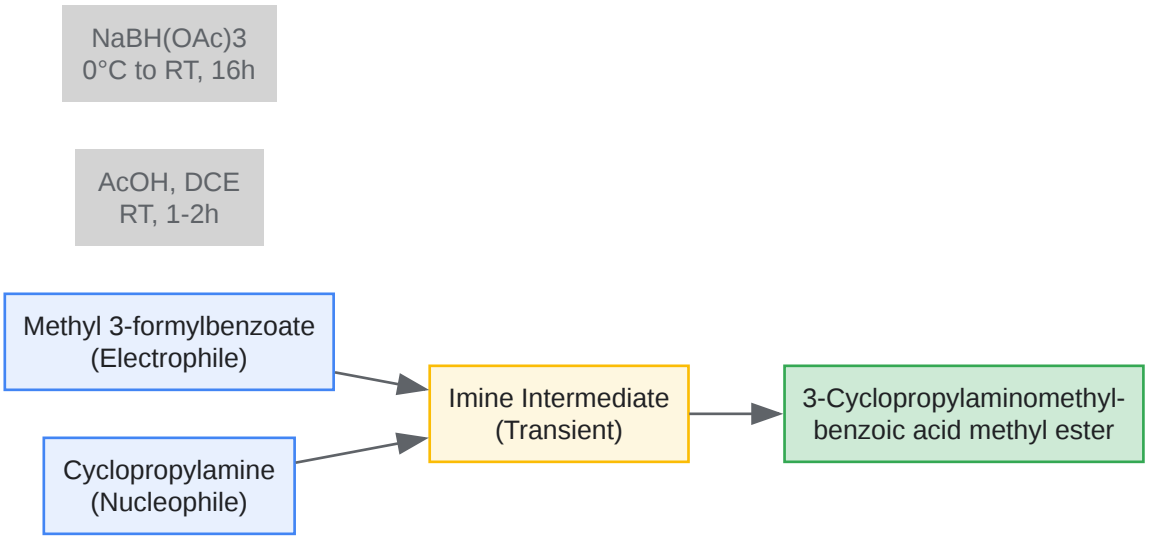

Click to download full resolution via product page

Caption: One-pot reductive amination pathway via sodium triacetoxyborohydride (STAB).

Diagram 2: Mechanism of LSD1 Inhibition (Pharmacophore Logic)

This diagram details how the cyclopropylamine "warhead" functions in a biological context.

© 2026 BenchChem. All rights reserved.

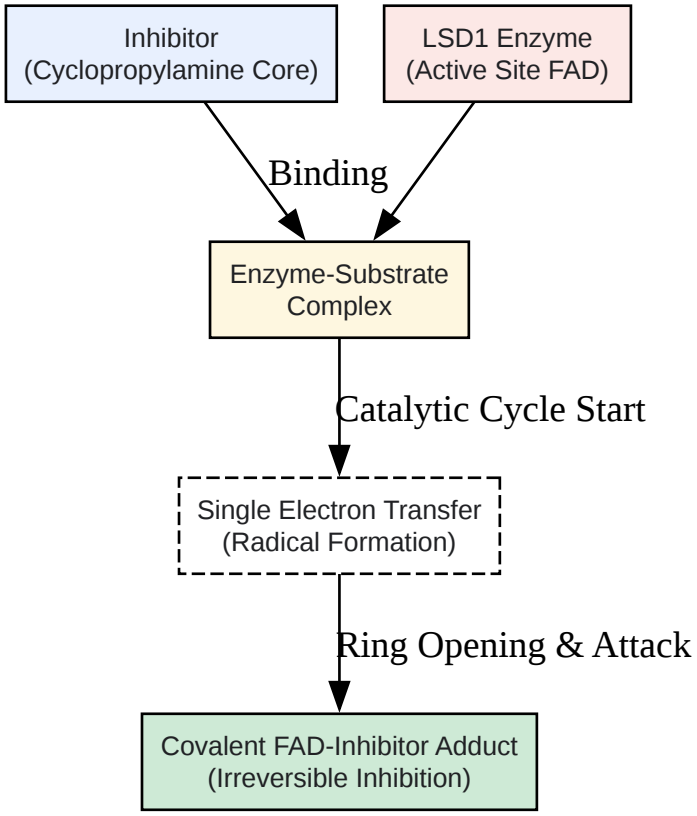

Click to download full resolution via product page

Caption: Mechanism-based inhibition of LSD1 by cyclopropylamine-containing scaffolds.[1]

Safety & Handling

- Hazard Class: Irritant (Skin/Eye), Acute Toxicity (Oral/Inhalation).
- Specific Warning: Cyclopropylamines can act as Monoamine Oxidase Inhibitors (MAOIs).[1][2][3] While this specific ester is an intermediate, it should be handled as a potential bioactive agent.
- Storage: Store at 2–8°C under inert atmosphere (Argon/Nitrogen). The secondary amine is prone to oxidation over extended periods.

References

- Abdel-Magid, A. F., et al. (1996).[1][4] "Reductive Amination of Aldehydes and Ketones with Sodium Triacetoxyborohydride." The Journal of Organic Chemistry.

© 2026 BenchChem. All rights reserved.

- Li, J. J. (2014). Name Reactions: A Collection of Detailed Mechanisms and Synthetic Applications. Springer.[1] (Reference for Leuckart/Reductive Amination mechanisms).
- Mimasu, S., et al. (2010). "Structure-Based Design of Flavin-Dependent Histone Demethylase LSD1 Inhibitors." Biochemistry. (Describes cyclopropylamine mechanism).
- PubChem Compound Summary. "Benzoic acid, 3-(aminomethyl)-, methyl ester derivatives." [1] National Library of Medicine.[1] [1]

Need Custom Synthesis?

BenchChem offers custom synthesis for rare earth carbides and specific isotopiclabeling.

Email: info@benchchem.com or Request Quote Online.

Sources

- 1. Benzoic acid, 3-(propylamino)-, methyl ester [webbook.nist.gov]
- 2. pdf.benchchem.com [pdf.benchchem.com]
- 3. longdom.org [longdom.org]
- 4. Amine synthesis by reductive amination (reductive alkylation) [organic-chemistry.org]
- To cite this document: BenchChem. [Technical Guide: 3-Cyclopropylaminomethyl-benzoic acid methyl ester[1]]. BenchChem, [2026]. [Online PDF]. Available at: [https://www.benchchem.com/product/b1449508/docs#technical-guide-3-cyclopropylaminomethyl-benzoic-acid-methyl-ester-1]

Disclaimer & Data Validity:

The information provided in this document is for Research Use Only (RUO) and is strictly not intended for diagnostic or therapeutic procedures. While BenchChem strives to provide accurate protocols, we make no warranties, express or implied, regarding the fitness of this product for every specific experimental setup.

Technical Support: The protocols provided are for reference purposes. Unsure if this reagent suits your experiment?

© 2026 BenchChem. All rights reserved.

Need Industrial/Bulk Grade? Request Custom Synthesis Quote

BenchChem

Our mission is to be the trusted global source of essential and advanced chemicals, empowering scientists and researchers to drive progress in science and industry.

Contact

Address: 3281 E Guasti Rd

Ontario, CA 91761, United States

Phone: (601) 213-4426

Email: info@benchchem.com

Contact our Ph.D. Support Team for a compatibility check

© 2026 BenchChem. All rights reserved.