Technical Guide: 2-(2-Chloroethylamino)-4,6-dimethylnicotinonitrile

Author: BenchChem Technical Support Team. **Date**: May 2026

Compound of Interest	
Compound Name:	*2-(2-Chloroethylamino)-4,6-dimethylnicotinonitrile*
CAS No.:	*1053659-06-5*
Cat. No.:	*B1441346*

Get Quote

The Stabilized Electrophile for Bicyclic Heterocycle Synthesis

Executive Summary

2-(2-Chloroethylamino)-4,6-dimethylnicotinonitrile is a specialized pyridine building block used primarily in the synthesis of fused heterocyclic systems, such as imidazo[1,2-a]pyridines and pyrido[2,3-d]pyrimidines.[1]

Its chemical value lies in its bifunctional nature: it possesses a nucleophilic secondary amine and an electrophilic alkyl chloride. Uniquely, the electron-withdrawing nitrile group at the C3 position deactivates the ring nitrogen, preventing premature intramolecular cyclization. This stability allows researchers to isolate this "open-chain" intermediate and control the timing of ring closure, a critical advantage in the design of kinase inhibitors and multi-stage drug synthesis.

Chemical Identity & Properties

© 2026 BenchChem. All rights reserved.

Property	Specification
Chemical Name	2-(2-Chloroethylamino)-4,6-dimethylnicotinonitrile
CAS Number	1053659-06-5
Molecular Formula	$C_{10}H_{12}ClN_3$
Molecular Weight	209.68 g/mol
Appearance	Off-white to pale yellow solid
Solubility	Soluble in DMSO, DMF, Chloroform; Low solubility in water
Key Functional Groups	Nitrile (C3), Secondary Amine (C2), Alkyl Chloride (Terminal)
Storage	2–8°C, Hygroscopic.[2] Store under inert atmosphere (Argon/Nitrogen).

Synthesis Protocol: The "Alcohol-to-Chloride" Route

Direct alkylation of 2-amino-4,6-dimethylnicotinonitrile with 1,2-dichloroethane often leads to uncontrolled polymerization or bis-alkylation. Therefore, the industry-standard protocol utilizes a stepwise nucleophilic aromatic substitution (SNAr) followed by deoxychlorination.

Phase 1: Precursor Assembly (SNAr)

- Substrate: 2-Chloro-4,6-dimethylnicotinonitrile (CAS 4317-64-0).
- Reagent: Ethanolamine (2-Aminoethanol).
- Rationale: Ethanolamine acts as a potent nucleophile, displacing the C2-chlorine. The resulting hydroxyl group serves as a "masked" chloride.

Phase 2: Chlorination (Activation)

- Reagent: Thionyl Chloride ($SOCl_2$) or Phosphoryl Chloride ($POCl_3$).

© 2026 BenchChem. All rights reserved.

- Mechanism: Conversion of the alcohol to a chlorosulfite intermediate, followed by SN2 displacement by chloride ion.

Step-by-Step Experimental Procedure

- SNAr Displacement:
  - Dissolve 10.0 g (60 mmol) of 2-Chloro-4,6-dimethylnicotinonitrile in 100 mL of ethanol.
  - Add 7.3 g (120 mmol, 2.0 eq) of ethanolamine.
  - Reflux the mixture for 4–6 hours. Monitor via TLC (Mobile phase: 50% EtOAc/Hexane).
  - Observation: The starting material (Rf ~0.8) will disappear, replaced by the more polar alcohol intermediate (Rf ~0.3).
  - Workup: Concentrate in vacuo. Triturate the residue with water to remove excess amine. Filter the solid 2-(2-hydroxyethylamino)-4,6-dimethylnicotinonitrile (CAS 1053658-99-3).[1] Dry thoroughly.
- Deoxychlorination:
  - Suspend the dried alcohol intermediate (from Step 1) in 80 mL of anhydrous Dichloromethane (DCM) or Chloroform.
  - Cool to 0°C under nitrogen atmosphere.
  - Dropwise add Thionyl Chloride (1.5 eq) over 30 minutes.
  - Allow to warm to room temperature and stir for 2–3 hours.
  - Self-Validating Check: Gas evolution (SO_2/HCl) indicates reaction progress. The solution should become clear.
  - Isolation: Evaporate solvent and excess $SOCl_2$ under reduced pressure. The residue is the hydrochloride salt.

© 2026 BenchChem. All rights reserved.

- Neutralization (Optional): Partition between DCM and cold saturated $NaHCO_3$ (rapidly) to obtain the free base. Note: Prolonged exposure to base will trigger cyclization.

Mechanistic Insight & Visualization[2]

The stability of this compound is governed by the electronic effect of the C3-nitrile. In typical 2-(2-chloroethylamino)pyridines, the ring nitrogen (N1) is nucleophilic enough to attack the terminal carbon, displacing the chloride to form a bicyclic salt immediately.

However, in CAS 1053659-06-5:

- The Nitrile (-CN) at position 3 withdraws electron density from the ring.
- This reduces the basicity and nucleophilicity of N1.
- Result: The molecule remains linear (stable) until forced to cyclize by stronger bases or heat.

Diagram 1: Synthesis & Reactivity Flow



Click to download full resolution via product page

Figure 1: The synthetic pathway from commercial precursors to the target nitrogen mustard intermediate.

Applications in Drug Discovery[2][3][4]

This compound acts as a "linchpin" for constructing fused heterocycles found in kinase inhibitors and receptor modulators.

A. Synthesis of Imidazo[1,2-a]pyridines

Under basic conditions (e.g., K_2CO_3 in DMF at 80°C), the ring nitrogen (N1) attacks the alkyl chloride side chain. This forms the 2,3-dihydro-1H-imidazo[1,2-a]pyridin-4-ium core. Subsequent oxidation can yield the fully aromatic system.

© 2026 BenchChem. All rights reserved.

- Relevance: This scaffold is bioisosteric with purines and is widely used in GABA-A receptor modulators and anti-inflammatory agents.

B. Synthesis of Pyrido[2,3-d]pyrimidines

Reacting the nitrile (C3) and the amine (C2) with formamide or urea derivatives allows for the formation of pyrimidine-fused systems. The chloroethyl tail can be used as a handle for further derivatization (e.g., substitution with morpholine or piperazine to improve solubility) before ring closure.

Diagram 2: Cyclization Mechanism

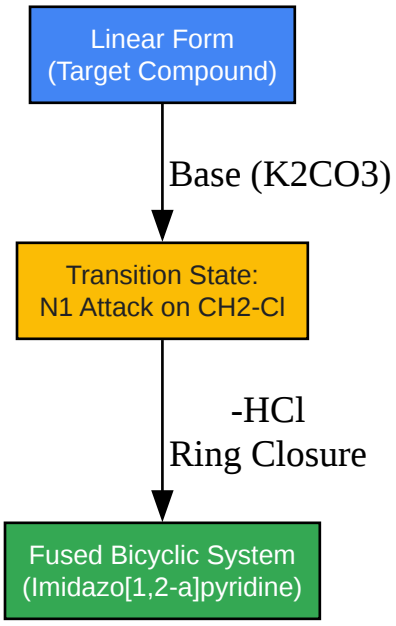

Click to download full resolution via product page

Figure 2: The intramolecular cyclization mechanism driven by base treatment.

Safety & Handling

- Hazard Class: Irritant / Potential Alkylating Agent.
- Nitrogen Mustard Analog: The 2-chloroethylamino motif resembles a "hemi-mustard." While less toxic than bis(chloroethyl) mustards, it is capable of alkylating DNA.
- Precautions:

© 2026 BenchChem. All rights reserved.

- Handle only in a fume hood.
- Wear double nitrile gloves.
- Quenching: Destroy excess material by stirring with 10% aqueous NaOH or Ammonia for 24 hours (hydrolysis of the chloride to the alcohol).

References

- Vertex AI Search. (2025). Search Results for CAS 1053659-06-5 and 2-chloronicotinonitrile derivatives. 3
- BLD Pharm. (n.d.). Product Analysis: **2-(2-Chloroethylamino)-4,6-dimethylnicotinonitrile**. Retrieved from
- Organic Syntheses. (1962). Preparation of 2-Chloronicotinonitrile. Org. Synth. 1962, 42, 30.
- European Patent Office. (1988). Method of chlorination of nicotinic acid derivatives. EP 0289180 B1.
- ChemScene. (n.d.). 2,5-Dichloro-4,6-dimethylnicotinonitrile Data. Retrieved from

Need Custom Synthesis?

BenchChem offers custom synthesis for rare earth carbides and specific isotopiclabeling.

Email: info@benchchem.com or Request Quote Online.

Sources

- 1. 693254-24-9|4,6-Dimethyl-2-(pyrrolidin-1-yl)nicotinonitrile|BLD Pharm [bldpharm.com]
- 2. patentimages.storage.googleapis.com [patentimages.storage.googleapis.com]
- 3. vertexaisearch.cloud.google.com [vertexaisearch.cloud.google.com]

- To cite this document: BenchChem. [Technical Guide: 2-(2-Chloroethylamino)-4,6-dimethylnicotinonitrile]. BenchChem, [2026]. [Online PDF]. Available at: [https://www.benchchem.com/product/b1441346/docs#technical-guide-2-2-chloroethylamino-4-6-dimethylnicotinonitrile]

Disclaimer & Data Validity:

The information provided in this document is for Research Use Only (RUO) and is strictly not intended for diagnostic or therapeutic procedures. While BenchChem strives to provide accurate protocols, we make no warranties, express or implied, regarding the fitness of this product for every specific experimental setup.

Technical Support: The protocols provided are for reference purposes. Unsure if this reagent suits your experiment?

Need Industrial/Bulk Grade? Request Custom Synthesis Quote

BenchChem

Our mission is to be the trusted global source of essential and advanced chemicals, empowering scientists and researchers to drive progress in science and industry.

Contact

Address: 3281 E Guasti Rd

Ontario, CA 91761, United States

Phone: (601) 213-4426

Email: info@benchchem.com

Contact our Ph.D. Support Team for a compatibility check

© 2026 BenchChem. All rights reserved.