Technical Support Center: Mitigating Sympathomimetic Side Effects in Animal Studies

Author: BenchChem Technical Support Team. **Date**: May 2026

Compound of Interest

Compound Name:	*1-Benzyl-3-(trifluoromethyl)piperazine*
CAS No.:	*167566-34-9*
Cat. No.:	*B1440723*

Get Quote

Introduction

Sympathomimetic drugs, which mimic the effects of the sympathetic nervous system, are widely used in animal studies to investigate cardiovascular function, neurological disorders, and a range of other physiological processes.[1][2] However, their mechanism of action inherently leads to a spectrum of side effects, including cardiovascular complications like hypertension and tachycardia, as well as behavioral and physiological changes such as anxiety and hyperthermia.[3][4] These unintended effects can confound experimental results and compromise animal welfare.

This technical support center provides researchers, scientists, and drug development professionals with a comprehensive guide to anticipating, troubleshooting, and mitigating the common side effects of sympathomimetic agents in animal studies. By combining field-proven insights with established scientific principles, this guide aims to enhance the integrity of your research and ensure the ethical treatment of laboratory animals.

Frequently Asked Questions (FAQs)

© 2026 BenchChem. All rights reserved.

General

Q1: What are the most common sympathomimetic drugs used in animal research and their primary side effects?

A1: Commonly used sympathomimetics include epinephrine, norepinephrine, phenylephrine, dobutamine, and isoproterenol.[5][6] Their primary side effects stem from excessive activation of adrenergic receptors and can be categorized as follows:

- Cardiovascular: Hypertension, tachycardia, arrhythmias, and myocardial ischemia.[3][6][7]
- Behavioral: Anxiety, agitation, and stereotyped (repetitive) behaviors.[4]
- Physiological: Hyperthermia, tremors, and metabolic disturbances like hyperglycemia.[7][8]

Cardiovascular Side Effects

Q2: My animal model is experiencing severe hypertension after administering a sympathomimetic. How can I manage this?

A2: Acute hypertension can be managed by administering an alpha-adrenoceptor antagonist.[9][10] Prazosin (selective for α1) or phentolamine (non-selective) are common choices. It is crucial to have determined an effective dose range for your specific animal model and experimental conditions beforehand. Continuous blood pressure monitoring is essential to titrate the antagonist dose effectively and avoid hypotension.[7]

Q3: I'm observing significant tachycardia and arrhythmias in my study. What is the best mitigation strategy?

A3: Beta-blockers are the primary agents for controlling tachycardia and arrhythmias induced by sympathomimetics. Propranolol (non-selective β-blocker) or metoprolol (selective β1-blocker) can be used.[11] The choice between a selective and non-selective beta-blocker will depend on the specific sympathomimetic used and the desired experimental outcome. For instance, if preserving β2-mediated effects is important, a β1-selective blocker would be preferable.

Behavioral Side Effects

© 2026 BenchChem. All rights reserved.

Q4: My animals are showing signs of anxiety and agitation. How can I minimize these behavioral side effects without compromising the study?

A4: Anxiolytic agents can be used to manage behavioral side effects.[12] Benzodiazepines, such as diazepam, are effective but can have sedative effects that may interfere with certain behavioral tests.[13] Newer anxiolytics with different mechanisms of action, like buspirone, may be a suitable alternative with fewer sedative properties.[14] The choice of anxiolytic should be carefully considered based on the specific behavioral endpoints of your study.

Physiological Side Effects

Q5: How can I prevent or treat hyperthermia induced by sympathomimetics?

A5: Hyperthermia is a serious side effect that requires immediate attention.[8][15] Prophylactic measures include conducting experiments in a temperature-controlled environment. For treatment, active cooling methods such as applying cool compresses or using a fan can be effective.[15] In severe cases, administration of cooled intravenous fluids may be necessary.[15] Continuous monitoring of core body temperature is critical.

Troubleshooting Guides

Issue 1: Uncontrolled Cardiovascular Instability

Symptoms: Rapid fluctuations in blood pressure and heart rate, frequent arrhythmias.

Potential Causes:

- Inappropriate Dose: The dose of the sympathomimetic may be too high for the specific animal model or individual animal.
- Anesthesia Interaction: Some anesthetics can sensitize the myocardium to the arrhythmogenic effects of catecholamines.
- Underlying Pathology: The animal model may have a pre-existing cardiovascular condition.

Troubleshooting Steps:

© 2026 BenchChem. All rights reserved.

- Review and Optimize Dose: Conduct a thorough dose-response study to determine the minimum effective dose of the sympathomimetic that achieves the desired primary effect with minimal side effects.

- Evaluate Anesthetic Protocol: Consider alternative anesthetic agents that have less impact on cardiovascular stability. For example, isoflurane can induce hypotension, which might be exacerbated by certain sympathomimetics.[16] A balanced anesthesia protocol, potentially including analgesics, can reduce the required dose of the primary anesthetic.[17]

- Pre-screen Animals: If feasible, perform baseline cardiovascular assessments (e.g., ECG, blood pressure) to exclude animals with pre-existing abnormalities.

- Administer Antagonists Prophylactically: In some cases, pre-treatment with a low dose of a beta-blocker or alpha-antagonist can prevent the development of severe cardiovascular instability.

Issue 2: Confounding Behavioral Artifacts

Symptoms: Stereotyped behaviors, hyperactivity, or freezing behavior that interferes with the primary behavioral measurements of the study.

Potential Causes:

- Excessive CNS Stimulation: The sympathomimetic may be crossing the blood-brain barrier and causing non-specific central nervous system activation.

- Stress-Induced Response: The handling and injection procedures themselves can induce stress and anxiety, which are then amplified by the sympathomimetic.

- Lack of Habituation: Animals that are not properly acclimated to the experimental environment and procedures are more likely to exhibit stress-related behaviors.

Troubleshooting Steps:

- Select a More Peripherally Acting Agent: If the desired effects are peripheral, consider using a sympathomimetic with lower blood-brain barrier permeability.

© 2026 BenchChem. All rights reserved.

- Refine Handling and Dosing Procedures: Implement gentle handling techniques and consider less stressful routes of administration, if possible. Allow for an adequate acclimation period for the animals to the laboratory environment and experimental apparatus.
- Incorporate a Vehicle-Only Control Group: This will help differentiate the behavioral effects of the drug from those caused by the experimental procedures.
- Consider Anxiolytic Co-administration: If behavioral side effects persist, co-administration of a low-dose anxiolytic that does not interfere with the primary outcome measures may be necessary.[12][18]

Experimental Protocols

Protocol 1: Prophylactic Mitigation of Tachycardia with a Beta-Blocker

Objective: To prevent excessive tachycardia during the administration of a sympathomimetic agent (e.g., isoproterenol) in a rodent model.

Materials:

- Isoproterenol solution
- Propranolol solution
- Saline (vehicle)
- Anesthetized rodent equipped for continuous ECG and heart rate monitoring
- Infusion pumps

Procedure:

- Anesthetize the animal according to your institutionally approved protocol.
- Establish intravenous access for drug administration.

© 2026 BenchChem. All rights reserved.

- Begin continuous ECG and heart rate monitoring. Allow for a stabilization period to obtain baseline values.
- Administer a prophylactic dose of propranolol (e.g., 0.1-1 mg/kg, IV) or saline as a control. The exact dose should be predetermined in a pilot study.
- Wait for 10-15 minutes for the propranolol to take effect.
- Begin the infusion of the sympathomimetic agent at the desired dose.
- Continuously monitor heart rate and ECG throughout the experiment.
- Compare the heart rate response in the propranolol-treated group to the saline-treated group to evaluate the efficacy of the prophylactic treatment.

Protocol 2: Management of Sympathomimetic-Induced Hyperthermia

Objective: To safely and effectively reduce hyperthermia in a conscious rodent following sympathomimetic administration.

Materials:

- Rectal thermometer or implantable temperature probe
- Cooling pad or surface
- Fan
- Spray bottle with room temperature water
- Cooled (4°C) sterile saline for injection (if necessary)

Procedure:

- Continuously monitor the animal's core body temperature.

© 2026 BenchChem. All rights reserved.

- If the temperature exceeds a predetermined threshold (e.g., 39.5°C), initiate cooling measures.
- Transfer the animal to a cooling pad or surface.
- Direct a gentle stream of air from a fan towards the animal.
- Lightly mist the animal's fur with room temperature water. The evaporation will aid in cooling.
- Continue to monitor the temperature closely. Discontinue active cooling once the temperature returns to the normal range to prevent hypothermia.
- If external cooling is insufficient, administer a bolus of cooled sterile saline intraperitoneally or subcutaneously.

Data Presentation

Table 1: Example Doses of Adrenergic Antagonists for Mitigating Side Effects in Rodents

Antagonist	Class	Target Receptor(s)	Common IV Dose Range (mg/kg)	Primary Mitigated Side Effect
Prazosin	Alpha-1 Blocker	α1	0.1 - 1.0	Hypertension
Phentolamine	Non-selective Alpha Blocker	α1, α2	1.0 - 5.0	Hypertension
Propranolol	Non-selective Beta Blocker	β1, β2	0.1 - 2.0	Tachycardia, Arrhythmias
Metoprolol	Selective Beta-1 Blocker	β1	0.5 - 2.0	Tachycardia, Arrhythmias

Note: These are starting dose ranges and should be optimized for your specific experimental conditions.

Visualizations

© 2026 BenchChem. All rights reserved.

Signaling Pathway of Sympathomimetic Action and Mitigation

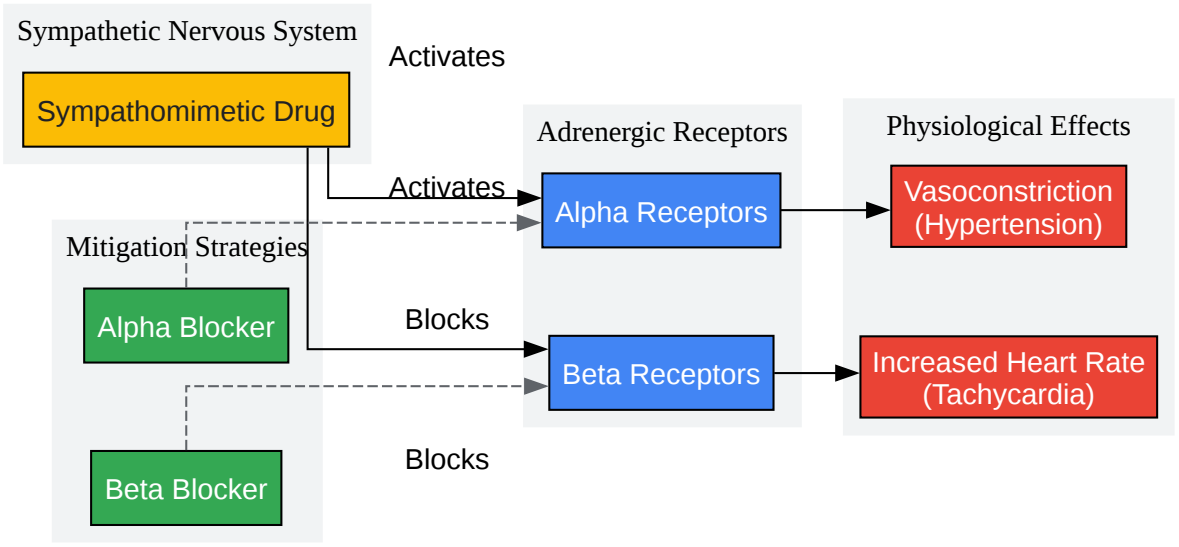

Click to download full resolution via product page

Caption: Sympathomimetic action and mitigation pathway.

Experimental Workflow for Mitigating Cardiovascular Side Effects

© 2026 BenchChem. All rights reserved.

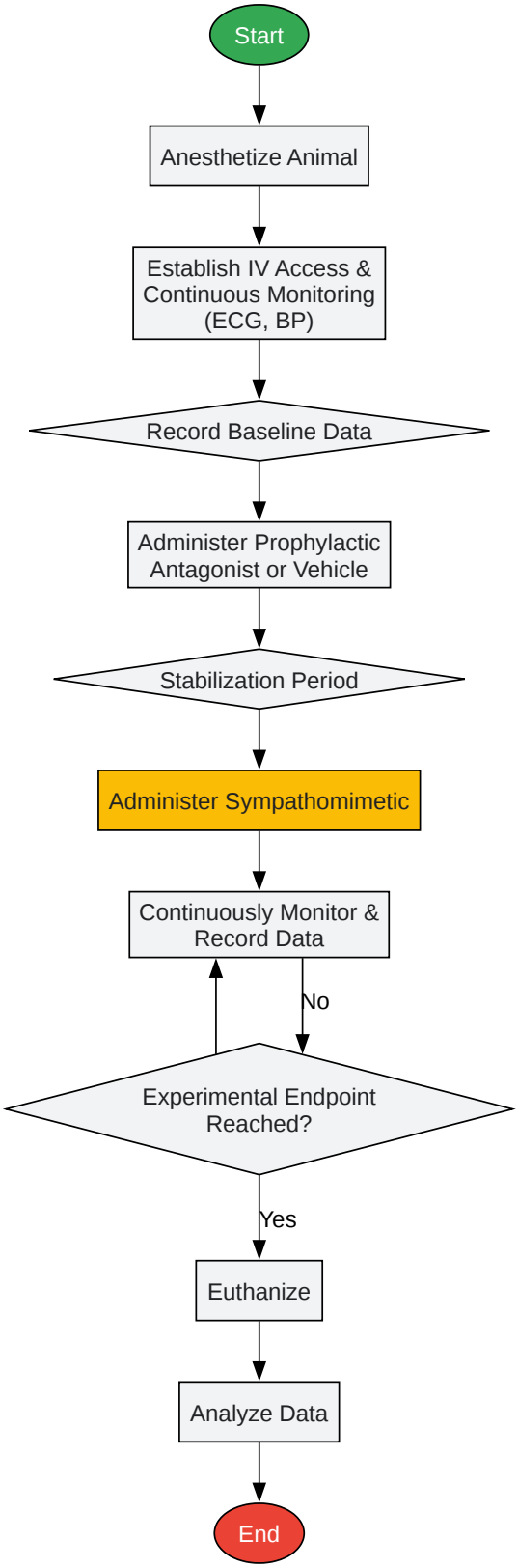

Click to download full resolution via product page

Caption: Workflow for cardiovascular side effect mitigation.

© 2026 BenchChem. All rights reserved.

References

- Mad Barn. (2020). Sympathomimetics in veterinary species under anesthesia. Research Bank. [Link]
- Wernli, G., et al. (2012). β-Adrenoceptor Blockers Increase Cardiac Sympathetic Innervation by Inhibiting Autoreceptor Suppression of Axon Growth. The Journal of Neuroscience. [Link]
- Ishikura, K., et al. (2012). Acute Effects of Beta-Blocker With Intrinsic Sympathomimetic Activity on Stress-Induced Cardiac Dysfunction in Rats. Journal of Cardiology. [Link]
- Richards, J. R., et al. (2023). Sympathomimetic Toxicity. In: StatPearls [Internet]. StatPearls Publishing. [Link]
- Costa, V. M., et al. (2021). Natural Sympathomimetic Drugs: From Pharmacology to Toxicology. Pharmaceuticals. [Link]
- Crema, A., et al. (1971). Some Actions of Sympathomimetic Amines and Their Antagonists on Mouse Superfused Ileum. British Journal of Pharmacology. [Link]
- Hale, A. T., et al. (2022). Novel protocol to establish the myocardial infarction model in rats using a combination of medetomidine-midazolam-butorphanol (MMB) and atipamezole. Frontiers in Cardiovascular Medicine. [Link]
- Pinoy Vet Acadz. (2022). VET PHARMA 1 | Adrenergic Drugs (Sympathomimetics) | (2022-2023). YouTube. [Link]
- Wikipedia. (2023). Modafinil. [Link]
- Costa, V. M., et al. (2021). Natural Sympathomimetic Drugs: From Pharmacology to Toxicology. MDPI. [Link]
- Al-Kuraishy, H. M., et al. (2021). Effects of β-Blockers on the Sympathetic and Cytokines Storms in Covid-19. Frontiers in Immunology. [Link]
- Vatner, D. E., et al. (1984). Mechanisms of supersensitivity to sympathomimetic amines in the chronically denervated heart of the conscious dog. Circulation Research. [Link]

© 2026 BenchChem. All rights reserved.

- Pinoy Vet Acadz. (2022). VET PHARMA 2 | Bronchodilators: Sympathomimetics | Module 20.3 (Student Output). YouTube. [Link]
- CV Pharmacology. Alpha-Adrenoceptor Antagonists (Alpha-Blockers). [Link]
- Wikipedia. (2023). Adrenergic blocking agent. [Link]
- Morales-Demori, R. (2023). Sympathomimetics. In: StatPearls [Internet]. StatPearls Publishing. [Link]
- Wikipedia. (2023). Adrenaline. [Link]
- AbbVie. (2023). SYNTHROID® (levothyroxine sodium) tablets, for oral use. [Link]
- Crema, A., et al. (1971). Some Actions of Sympathomimetic Amines and Their Antagonists on Mouse Superfused Ileum. British Journal of Pharmacology. [Link]
- King, K. E., et al. (2021). Sympathomimetic-Induced Hyperthermia and Hyponatremia: A Simulation Case for Emergency Medicine Residents. MedEdPORTAL. [Link]
- Hale, A. T., et al. (2023). A review on experimental surgical models and anesthetic protocols of heart failure in rats. Frontiers in Cardiovascular Medicine. [Link]
- Grubb, T., et al. (2020). 2020 AAHA Anesthesia and Monitoring Guidelines for Dogs and Cats. Journal of the American Animal Hospital Association. [Link]
- Gryz M. V., et al. (2024). The use of anxiolytic drugs for the correction of behavioral disorders in mammals. Regulatory Mechanisms in Biosystems. [Link]
- Trenn, K. L., et al. (1990). Influence of Alpha 1- And Alpha 2-adrenoceptor Antagonist Therapy on the Development of Hypertension in Spontaneously Hypertensive Rats. Journal of Pharmacology and Experimental Therapeutics. [Link]
- Carbone, L., & Austin, J. (2016). Pain and Laboratory Animals: Publication Practices for Better Data Reproducibility and Better Animal Welfare. PLOS ONE. [Link]
- Stokes, W. S. (2015). Animal Welfare Considerations in Biomedical Research and Testing. In: Current Topics in Behavioral Neurosciences. [Link]

© 2026 BenchChem. All rights reserved.

- Griebel, G., & Holmes, A. (2013). The age of anxiety: role of animal models of anxiolytic action in drug discovery. Molecular Psychiatry. [Link]
- University of Iowa. (2020). Anesthetics and Analgesics, Veterinary Guidelines for. [Link]
- Lamont, L. A., & Grimm, K. A. (2020). Sympathomimetics in veterinary species under anesthesia. Frontiers in Veterinary Science. [Link]
- MSD Veterinary Manual. Psychotropic Agents for Treatment of Animals. [Link]
- International Association for the Study of Pain. IASP Guidelines for the Use of Animals in Research. [Link]
- Zethof, T. J., et al. (1994). Stress-induced hyperthermia in singly housed mice. Physiology & Behavior. [Link]
- Michel, M. C., et al. (1994). Alpha- and beta-adrenoceptors in hypertension: molecular biology and pharmacological studies. Journal of Hypertension. [Link]
- Gryz M. V., et al. (2024). The use of anxiolytic drugs for the correction of behavioral disorders in mammals. Regulatory Mechanisms in Biosystems. [Link]
- King, K. E., et al. (2021). Sympathomimetic-Induced Hyperthermia and Hyponatremia: A Simulation Case for Emergency Medicine Residents. MedEdPORTAL. [Link]
- Xia, L., et al. (2021). Resveratrol against Cardiac Fibrosis: Research Progress in Experimental Animal Models. Molecules. [Link]
- National Research Council (US) Committee on Guidelines for the Use of Animals in Neuroscience and Behavioral Research. (2003). Guidelines for the Care and Use of Mammals in Neuroscience and Behavioral Research. National Academies Press (US). [Link]
- MSD Veterinary Manual. Vasoactive Drugs for Use in Animals. [Link]
- Li, J., et al. (2020). Experimental Rodent Models of Cardiovascular Diseases. Frontiers in Cardiovascular Medicine. [Link]

© 2026 BenchChem. All rights reserved.

- Katzung, B. G. (2023). Adrenoceptor Agonists & Sympathomimetic Drugs. In: Katzung's Basic & Clinical Pharmacology, 16th Edition. AccessWorldMed. [Link]
- Veterian Key. (2016). Antidepressants and Anxiolytics. [Link]
- Animal Welfare Information Center. (1986). ESSENTIALS FOR ANIMAL RESEARCH A PRIMER FOR RESEARCH PERSONNEL. Arcadia University. [Link]
- Bennett, K. (2017). Acclimation of Training Animals for Standard Handling, Restraint and Laboratory Tech. YouTube. [Link]
- RJPT SimLab. List of Experiments. [Link]
- Alabaster, V. A., & Davey, M. J. (1986). The alpha 1-adrenoceptor antagonist profile of doxazosin: preclinical pharmacology. British Journal of Clinical Pharmacology. [Link]

Need Custom Synthesis?

BenchChem offers custom synthesis for rare earth carbides and specific isotopiclabeling.

Email: info@benchchem.com or Request Quote Online.

Sources

- 1. madbarn.com [madbarn.com]
- 2. Sympathomimetics in veterinary species under anesthesia - PubMed [pubmed.ncbi.nlm.nih.gov]
- 3. Modafinil - Wikipedia [en.wikipedia.org]
- 4. Adrenaline - Wikipedia [en.wikipedia.org]
- 5. Some actions of sympathomimetic amines and their antagonists on mouse superfused ileum - PubMed [pubmed.ncbi.nlm.nih.gov]
- 6. youtube.com [youtube.com]
- 7. Sympathomimetics - StatPearls - NCBI Bookshelf [ncbi.nlm.nih.gov]
- 8. mededportal.org [mededportal.org]

© 2026 BenchChem. All rights reserved.

- 9. CV Pharmacology | Alpha-Adrenoceptor Antagonists (Alpha-Blockers) [cvpharmacology.com]
- 10. Adrenergic blocking agent - Wikipedia [en.wikipedia.org]
- 11. β-Adrenoceptor Blockers Increase Cardiac Sympathetic Innervation by Inhibiting Autoreceptor Suppression of Axon Growth - PMC [pmc.ncbi.nlm.nih.gov]
- 12. medicine.dp.ua [medicine.dp.ua]
- 13. Sympathomimetic Toxicity - StatPearls - NCBI Bookshelf [ncbi.nlm.nih.gov]
- 14. Psychotropic Agents for Treatment of Animals - Pharmacology - MSD Veterinary Manual [msdvetmanual.com]
- 15. Sympathomimetic-Induced Hyperthermia and Hyponatremia: A Simulation Case for Emergency Medicine Residents - PMC [pmc.ncbi.nlm.nih.gov]
- 16. researchgate.net [researchgate.net]
- 17. aaha.org [aaha.org]
- 18. researchgate.net [researchgate.net]

- To cite this document: BenchChem. [Technical Support Center: Mitigating Sympathomimetic Side Effects in Animal Studies]. BenchChem, [2026]. [Online PDF]. Available at: [https://www.benchchem.com/product/b1440723/docs#technical-support-center-mitigating-sympathomimetic-side-effects-in-animal-studies]

Disclaimer & Data Validity:

The information provided in this document is for Research Use Only (RUO) and is strictly not intended for diagnostic or therapeutic procedures. While BenchChem strives to provide accurate protocols, we make no warranties, express or implied, regarding the fitness of this product for every specific experimental setup.

Technical Support: The protocols provided are for reference purposes. Unsure if this reagent suits your experiment?

Need Industrial/Bulk Grade? Request Custom Synthesis Quote

© 2026 BenchChem. All rights reserved.

BenchChem

Our mission is to be the trusted global source of essential and advanced chemicals, empowering scientists and researchers to drive progress in science and industry.

Contact

Address: 3281 E Guasti Rd

Ontario, CA 91761, United States

Phone: (601) 213-4426

Email: info@benchchem.com

Contact our Ph.D. Support Team for a compatibility check

© 2026 BenchChem. All rights reserved.