Spectroscopic Analysis of 8-Fluoroquinoline Hydrochloride: A Technical Guide

Author: BenchChem Technical Support Team. **Date**: May 2026

Compound of Interest

Compound Name:	*8-Fluoroquinoline hydrochloride*
CAS No.:	*311346-65-3*
Cat. No.:	*B1440640*

Get Quote

Executive Summary

8-Fluoroquinoline hydrochloride (CAS: 394-68-3 for free base; HCl salt is the protonated form) is a critical heterocyclic building block in the synthesis of fluoroquinolone antibiotics and metallo-organic ligands.[1] Its analysis requires a multi-modal spectroscopic approach due to the unique electronic perturbations introduced by the fluorine atom at the C8 position (peri-position to the nitrogen).

This guide details the specific spectral signatures, experimental protocols, and quality control workflows necessary to validate the identity and purity of this compound.

Chemical Profile & Handling

The hydrochloride salt differs significantly from the free base in physical properties and spectral behavior.

© 2026 BenchChem. All rights reserved.

Property	Specification	Notes
Molecular Formula		(C9H6FN[1][2] · HCl)
Molecular Weight	183.61 g/mol	Free base: 147.15 g/mol
Physical State	Crystalline Solid	Hygroscopic; store in desiccator.[1]
Solubility	High: Water, Methanol, DMSO	Low: Non-polar organics (Hexane, Et2O).[1]
pKa (Conjugate Acid)	~5.0 (Predicted)	Nitrogen protonation affects UV/NMR shifts.[1]

Handling Protocol:

- Hygroscopicity: The HCl salt readily absorbs atmospheric moisture, which appears as a broad singlet at ~3.3-4.8 ppm in

  NMR (solvent dependent). Dry samples under high vacuum (

  mbar) at 40°C for 4 hours prior to quantitative analysis.
- Stability: Protect from light. Fluoroquinolines can undergo photodegradation.

NMR Spectroscopy: The Structural Gold Standard

Nuclear Magnetic Resonance (NMR) is the primary tool for structural validation. The presence of Fluorine-19 (

, 100% abundance) introduces extensive spin-spin coupling (

-coupling) that is diagnostic for the 8-position substitution.[1]

Experimental Setup

- Solvent: DMSO-

  is preferred for the HCl salt to ensure complete solubility and prevent exchange broadening of the

© 2026 BenchChem. All rights reserved.

proton.

- Reference: TMS (0.00 ppm) for

  /

  ; Trichlorofluoromethane (

  , 0.00 ppm) or hexafluorobenzene (-164.9 ppm) for

  .

NMR Analysis (Proton)

The aromatic region (7.0–9.2 ppm) will show a complex splitting pattern due to

and

coupling.

- Diagnostic Signal (H2): The proton adjacent to nitrogen (C2 position) appears most downfield (~9.0–9.2 ppm) as a doublet of doublets (

).

- Diagnostic Signal (H7): The proton ortho to the fluorine (C7 position) is critical. It appears as a multiplet (often a pseudo-triplet or

) due to coupling with H6 (

  Hz) and F8 (

  Hz).

- N-H+ Signal: In dry DMSO-

  , the acidic proton on the quinolinium nitrogen appears as a broad singlet, typically >12 ppm.

NMR Analysis (Carbon)

Carbon spectra are dominated by C-F coupling, which splits carbon signals into doublets.

© 2026 BenchChem. All rights reserved.

Carbon Position	Approx.[1][3][4][5] Shift (ppm)	Coupling Pattern ( )	Mechanistic Insight
C8 (Ipso)	155 - 160	Doublet (Hz)	Direct attachment to Fluorine.[1]
C7 (Ortho)	115 - 125	Doublet (Hz)	Strong proximity effect.[1]
C9 (Bridge)	125 - 135	Doublet (Hz)	Quaternary bridgehead carbon.[1]
C2	~145 - 150	Singlet (or weak)	Furthest from Fluorine.[1]

NMR Analysis (Fluorine)

- Chemical Shift: Expect a singlet (or multiplet if proton-coupled) in the range of -120 to -135 ppm.[1]
- Purity Check: This is the most sensitive method for detecting fluorinated impurities (e.g., regioisomers like 6-fluoroquinoline) which will show distinct peaks shifted by >5 ppm.

NMR Coupling Logic Diagram

The following diagram illustrates the connectivity and coupling pathways that must be verified.

© 2026 BenchChem. All rights reserved.

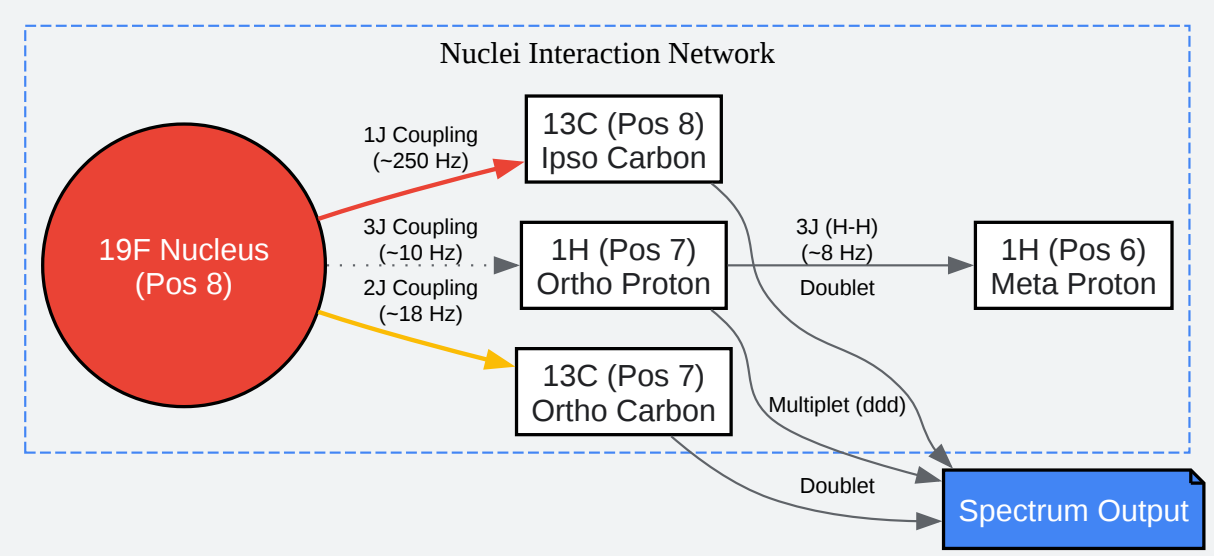

Click to download full resolution via product page

Caption: Spin-spin coupling network centered on the Fluorine-19 nucleus.[1] Arrows indicate the scalar coupling pathways diagnostic for 8-substitution.

Vibrational Spectroscopy (FTIR)

Infrared spectroscopy provides a rapid "fingerprint" identity check.

Sample Prep: KBr pellet or ATR (Attenuated Total Reflectance).

Key Assignments:

- N-H+ Stretch (2400–3000 cm^{-1}): A broad, multi-structured band characteristic of the hydrochloride salt (ammonium form). This band is absent in the free base.
- Aromatic C-H Stretch (3000–3100 cm^{-1}): Weak, sharp peaks above 3000.
- Quinoline Ring Modes (1500–1620 cm^{-1}): Strong skeletal vibrations (C=C / C=N).
- C-F Stretch (1000–1250 cm^{-1}): A strong, distinct band. While C-F stretches vary, the fluoroaromatic stretch is typically intense in the 1200–1250 cm^{-1} region.

© 2026 BenchChem. All rights reserved.

UV-Vis Spectroscopy

UV-Vis is used for concentration determination and pKa estimation.[1]

- Solvent: Methanol or 0.1 M HCl.
- Spectral Features:
  - Band I (220-230 nm): High intensity (
).[1]
  - Band II (300-320 nm): Lower intensity (
).[1]
- Acid Shift: The protonation of the nitrogen (HCl salt) causes a bathochromic shift (red shift) and hyperchromic effect compared to the free base.
- Protocol: Prepare a 10 µM stock solution. Scan 200–400 nm.
  - Validation: Calculate Molar Extinction Coefficient (
) at
    . Consistent
    values indicate purity.

Mass Spectrometry (MS)

Used for molecular weight confirmation.

- Method: ESI-MS (Electrospray Ionization) in Positive Mode.[1]
- Expected Signals:
  - [M+H]+: m/z 148.05 (Base peak).
  - [M+Na]+: m/z 170.04 (Adduct).

© 2026 BenchChem. All rights reserved.

- Note on Salt: The HCl counter-ion is not observed in positive ESI; you detect the protonated cation

  . To confirm the chloride, use Negative Mode ESI (m/z 35/37 for

) or Silver Nitrate precipitation test.

Quality Control Workflow

To ensure the material is suitable for drug development, follow this stepwise validation logic.

© 2026 BenchChem. All rights reserved.

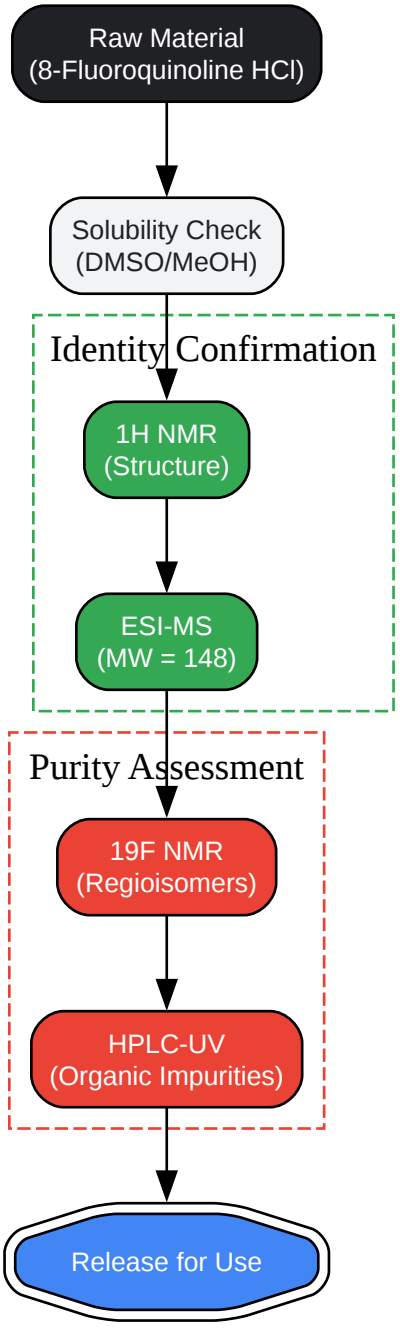

Click to download full resolution via product page

Caption: Stepwise quality control workflow. Green nodes represent structural confirmation; Red nodes represent critical purity gates.

References

- National Center for Biotechnology Information (2025).PubChem Compound Summary for CID 67856, 8-Fluoroquinoline. Retrieved from [Link]

© 2026 BenchChem. All rights reserved.

- Reich, H. J. (2024).Structure Determination Using Spectroscopic Methods: 19F Chemical Shifts. University of Wisconsin-Madison.[1] Retrieved from [Link]
- Silverstein, R. M., Webster, F. X., & Kiemle, D. J.Spectrometric Identification of Organic Compounds. (Standard text for interpretation of coupling constants and IR bands).

Need Custom Synthesis?

BenchChem offers custom synthesis for rare earth carbides and specific isotopiclabeling.

Email: info@benchchem.com or Request Quote Online.

Sources

- 1. 19F [nmr.chem.ucsb.edu]
- 2. ossila.com [ossila.com]
- 3. 13C NMR Chemical Shift [sites.science.oregonstate.edu]
- 4. Fluorine-19 nuclear magnetic resonance spectroscopy - Wikipedia [en.wikipedia.org]
- 5. organicchemistrydata.org [organicchemistrydata.org]
- To cite this document: BenchChem. [Spectroscopic Analysis of 8-Fluoroquinoline Hydrochloride: A Technical Guide]. BenchChem, [2026]. [Online PDF]. Available at: [https://www.benchchem.com/product/b1440640/docs#spectroscopic-analysis-of-8-fluoroquinoline-hydrochloride-a-technical-guide]

Disclaimer & Data Validity:

The information provided in this document is for Research Use Only (RUO) and is strictly not intended for diagnostic or therapeutic procedures. While BenchChem strives to provide accurate protocols, we make no warranties, express or implied, regarding the fitness of this product for every specific experimental setup.

Technical Support: The protocols provided are for reference purposes. Unsure if this reagent suits your experiment?

Need Industrial/Bulk Grade? Request Custom Synthesis Quote

BenchChem

Our mission is to be the trusted global source of essential and advanced chemicals, empowering scientists and researchers to drive progress in science and industry.

Contact

Address: 3281 E Guasti Rd

Ontario, CA 91761, United States

Phone: (601) 213-4426

Email: info@benchchem.com

Contact our Ph.D. Support Team for a compatibility check

© 2026 BenchChem. All rights reserved.