Stability of 3-(3-Methylpyridin-2-yl)cyclohexan-1-one under basic conditions

Author: BenchChem Technical Support Team. **Date**: April 2026

Compound of Interest

Compound Name:	*3-(3-Methylpyridin-2-yl)cyclohexan-1-one*
CAS No.:	*1391207-37-6*
Cat. No.:	*B1434051*

Get Quote

Technical Guide: Stability of 3-(3-Methylpyridin-2-yl)cyclohexan-1-one

Executive Summary

3-(3-Methylpyridin-2-yl)cyclohexan-1-one is a

-heteroaryl ketone. While the pyridine ring confers a degree of stability compared to electron-rich aryl ketones, the cyclohexanone moiety remains chemically versatile. Under basic conditions, this compound is susceptible to self-aldol condensation and oxidative degradation, rather than the retro-Michael reaction often feared with

-substituted ketones. The steric bulk of the 3-methyl group on the pyridine ring provides kinetic stabilization against some nucleophilic attacks but does not prevent enolization at the cyclohexanone

-positions.

© 2026 BenchChem. All rights reserved.

Stability Profile & Mechanisms

A. Base-Catalyzed Self-Condensation (Primary Instability)

The most critical failure mode for this compound in basic media (pH > 10) is intermolecular aldol condensation.

- Mechanism: The base deprotonates the

  -carbon (C2 or C6) of the cyclohexanone ring to form an enolate. This enolate attacks the carbonyl carbon of a second molecule.

- Risk Factor: High. Cyclohexanone derivatives are thermodynamically prone to dimerization and subsequent dehydration to form

  -unsaturated dimers.

- Observation: The reaction mixture turns from colorless/pale yellow to deep orange or brown, accompanied by the appearance of higher molecular weight peaks in LC-MS (Dimers:

).

B. Racemization Risk

The C3 position is a chiral center.

- Mechanism: Direct deprotonation at C3 is chemically difficult (

). However, if the conditions allow for a reversible Retro-Michael reaction (unlikely in mild base) or if the system undergoes equilibration via enolization-elimination pathways, optical purity can degrade.

- Assessment: In standard aqueous base (e.g.,

  ,

  ), racemization is slow. In strong alkoxides (e.g.,

  ), racemization is a significant risk due to the reversibility of the Michael addition equilibrium.

© 2026 BenchChem. All rights reserved.

C. Oxidative Degradation

- Mechanism: In the presence of base and oxygen, the enolate can trap

  to form

  -hydroperoxides, leading to ring cleavage or formation of 1,2-diketones (adipic acid derivatives).

- Prevention: All basic manipulations should be performed under an inert atmosphere (Nitrogen/Argon).

D. Mechanistic Visualization

The following diagram illustrates the competing pathways for the enolate intermediate generated under basic conditions.

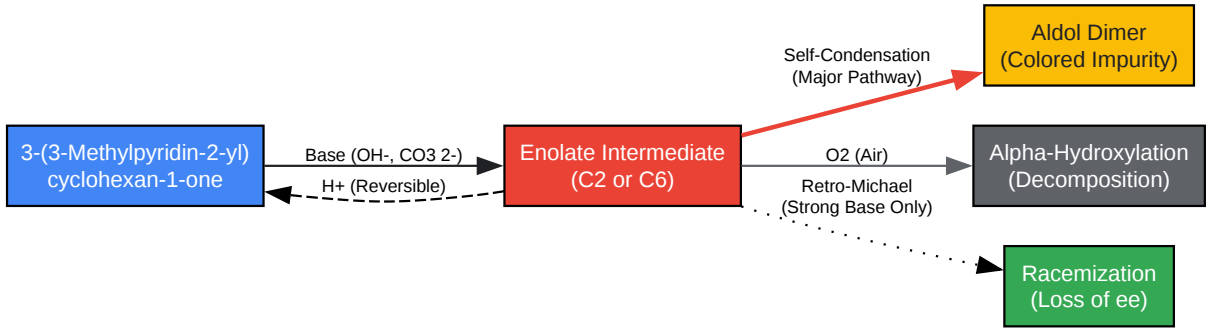

Click to download full resolution via product page

Caption: Figure 1. Competing reaction pathways for **3-(3-Methylpyridin-2-yl)cyclohexan-1-one** under basic conditions. The Aldol pathway is the dominant instability.

Troubleshooting Guide (Q&A)

Scenario 1: Color Change During Workup

User Question:"I washed my reaction mixture with 1M NaOH, and the organic layer turned dark brown. Did I decompose my product?"

© 2026 BenchChem. All rights reserved.

Scientist Answer: Likely, yes. The color change indicates the formation of conjugated enones via Aldol condensation.

- Diagnosis: Check LC-MS for a peak at roughly

  (Dimer - Water).

- Solution: Avoid strong bases like NaOH or KOH.

- Corrective Action: For future experiments, use saturated Ammonium Chloride (

) or mild Sodium Bicarbonate (

) for quenching and washing. If the pH must be adjusted, do so carefully at

  .

Scenario 2: Loss of Optical Purity

User Question:"My starting material was 99% ee, but after treating with Sodium Ethoxide, the ee dropped to 85%. Why?"

Scientist Answer: Strong alkoxides can trigger a reversible Retro-Michael addition or facilitate proton exchange at the chiral center if the pyridine ring provides sufficient electronic stabilization.

- Mechanism: The base promotes the equilibrium:

  . Even if the equilibrium lies far to the left, the transient formation of the achiral enone scrambles the stereochemistry.

- Recommendation: Use non-nucleophilic, bulky bases (like LiHMDS) at low temperatures (

) if deprotonation is required, or switch to weaker inorganic bases (

) in aprotic solvents.

Scenario 3: Storage Stability

User Question:"Can I store this compound as a solution in DMF or DMSO?"

© 2026 BenchChem. All rights reserved.

Scientist Answer: It is risky. DMF and DMSO can become slightly basic over time (amine formation in DMF).

- Best Practice: Store the neat solid at

  .

- If Solution is Necessary: Use anhydrous Acetonitrile or Dichloromethane. Avoid protic solvents or solvents prone to basic hydrolysis.

Recommended Handling Protocols

Protocol A: Safe Aqueous Workup

Standard procedure to minimize self-condensation.

- Cooling: Cool the reaction mixture to

  before quenching.

- Quenching: Slowly add saturated aqueous

  (pH ~5-6). This neutralizes any strong base present without generating a high pH environment.

- Extraction: Extract immediately with EtOAc or DCM.

- Washing: Wash the combined organics once with brine. Do not wash with NaOH or concentrated

  .

- Drying: Dry over

  (neutral) rather than

  (basic).

Protocol B: Stability Data Summary

Comparative stability in common solvent/base systems (24h at RT).

© 2026 BenchChem. All rights reserved.

Condition	Solvent	Stability Rating	Primary Degradant
1M NaOH	Water/THF	Poor	Aldol Dimer / Polymer
Sat.	Water/DCM	Good	None (< 1% degradation)
(1 eq)	DCM	Excellent	Stable
NaOEt (1 eq)	Ethanol	Fair	Racemization / Dimer

References

- Nielsen, A. T., & Houlihan, W. J. (2011). The Aldol Condensation. Organic Reactions. Wiley. [1] Link
- Carey, F. A., & Sundberg, R. J. (2007). Advanced Organic Chemistry: Part B: Reaction and Synthesis. Springer. (Chapter on Enolates and Michael Addition). Link
- Gawley, R. E. (1981). Stereochemistry of the Michael Addition. Synthesis, 1981(12), 985-1010. (Discussion on retro-Michael reversibility). Link
- PubChem Compound Summary. (2025). **3-(3-Methylpyridin-2-yl)cyclohexan-1-one** (CAS 1391207-37-6).[2] National Center for Biotechnology Information. Link

Need Custom Synthesis?

BenchChem offers custom synthesis for rare earth carbides and specific isotopiclabeling.

Email: info@benchchem.com or Request Quote Online.

Sources

- 1. researchgate.net [researchgate.net]
- 2. 3-(3-methylpyridin-2-yl)cyclohexan-1-one_1391207-37-6_M325170_ãPADOCSèSSZ±èPADPADæ ESAåESASSAåSTSHOPç½PU1ãPADPU1 [mdfcw.com]

© 2026 BenchChem. All rights reserved.

- To cite this document: BenchChem. [Stability of 3-(3-Methylpyridin-2-yl)cyclohexan-1-one under basic conditions]. BenchChem, [2026]. [Online PDF]. Available at: [https://www.benchchem.com/product/b1434051/docs#stability-of-3-3-methylpyridin-2-yl-cyclohexan-1-one-under-basic-conditions]

Disclaimer & Data Validity:

The information provided in this document is for Research Use Only (RUO) and is strictly not intended for diagnostic or therapeutic procedures. While BenchChem strives to provide accurate protocols, we make no warranties, express or implied, regarding the fitness of this product for every specific experimental setup.

Technical Support: The protocols provided are for reference purposes. Unsure if this reagent suits your experiment?

Need Industrial/Bulk Grade? Request Custom Synthesis Quote

BenchChem

Our mission is to be the trusted global source of essential and advanced chemicals, empowering scientists and researchers to drive progress in science and industry.

Contact

Address: 3281 E Guasti Rd

Ontario, CA 91761, United States

Phone: (601) 213-4426

Email: info@benchchem.com

Contact our Ph.D. Support Team for a compatibility check