Technical Support Center: Purification of 2-Methoxy-4-methyl-5-nitrobenzamide

Author: BenchChem Technical Support Team. **Date**: May 2026

Compound of Interest	
Compound Name:	*2-Methoxy-4-methyl-5-nitrobenzamide*
CAS No.:	*1352398-21-0*
Cat. No.:	*B1431649*

Get Quote

Introduction

Welcome to the Technical Support Center. This guide addresses the purification of **2-Methoxy-4-methyl-5-nitrobenzamide**, a critical intermediate often utilized in the synthesis of substituted benzamides (e.g., Tiapride, Sulpiride analogs).

The presence of the nitro group (-NO_2) at position 5 and the amide group (-$CONH_2$) creates a molecule with high polarity and potential for intermolecular hydrogen bonding. Consequently, this compound often exhibits high melting points and low solubility in non-polar solvents. This guide details a recrystallization strategy designed to maximize purity (>99%) while effectively rejecting common synthetic byproducts like regioisomers and unreacted 2-methoxy-4-methylbenzoic acid.

Module 1: Solvent System Selection

The Primary Recommendation: Ethanol (95%)

For this specific nitrobenzamide, 95% Ethanol is the optimal solvent system.

© 2026 BenchChem. All rights reserved.

- Why it works:
  - Temperature Coefficient: The compound exhibits a steep solubility curve in ethanol—sparingly soluble at room temperature (RT) but highly soluble at reflux (~78°C).
  - Impurity Rejection:
    - Non-polar impurities (e.g., unreacted starting materials lacking the nitro group) remain in the mother liquor due to the moderate polarity of ethanol.
    - Inorganic salts (from nitration acids) are largely insoluble in hot ethanol and can be removed via hot filtration.
    - Regioisomers: Isomers often possess different crystal lattice energies. Slow cooling in ethanol allows the thermodynamically stable 5-nitro isomer to crystallize preferentially.

Alternative Solvent Systems

If 95% Ethanol fails (e.g., sample is too insoluble or oils out), consult the table below:

Solvent System	Ratio (v/v)	Application Case	Mechanism
Methanol	100%	High-throughput purification; higher solubility than ethanol.	Higher polarity; faster evaporation but higher toxicity.
DMF / Water	1:1 to 1:3	Sample is insoluble in boiling ethanol.	DMF dissolves the nitro-amide; water acts as an anti-solvent to force precipitation upon cooling.
Acetic Acid	100%	Removal of basic impurities (e.g., aniline derivatives).	Protonation of amine impurities keeps them in solution; the nitrobenzamide crystallizes out.

© 2026 BenchChem. All rights reserved.

Module 2: The Recrystallization Protocol

Workflow Diagram

The following diagram outlines the critical path for purification, highlighting decision points for impurity removal.

© 2026 BenchChem. All rights reserved.

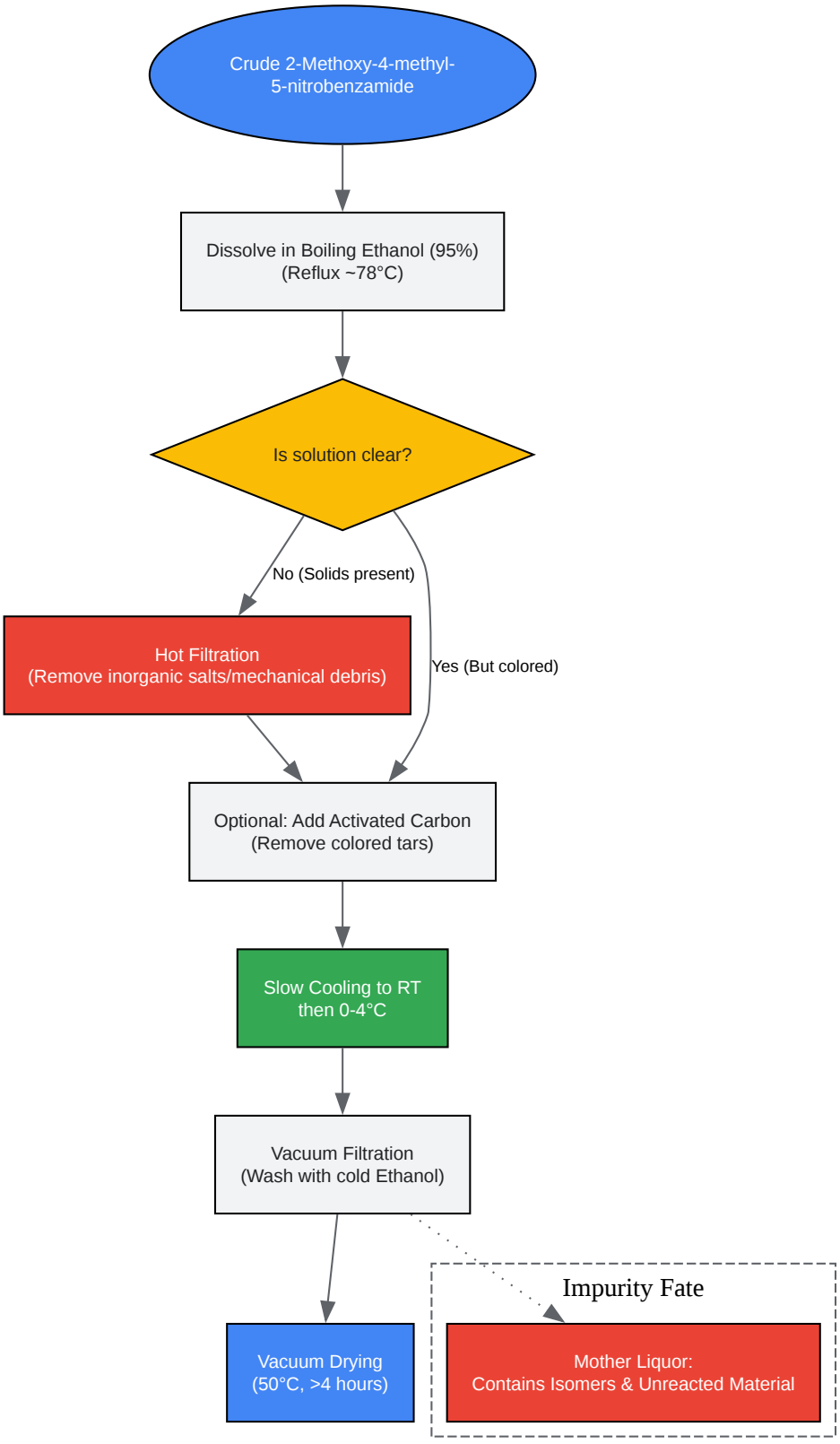

Click to download full resolution via product page

Figure 1: Step-by-step recrystallization workflow for nitrobenzamide derivatives.

© 2026 BenchChem. All rights reserved.

Detailed Methodology

- Dissolution:
  - Place the crude solid in an Erlenmeyer flask.
  - Add a minimal amount of 95% Ethanol.
  - Heat to reflux on a stir plate/heating block.
  - Add solvent in small portions through the condenser until the solid just dissolves.[1]
  - Note: If the solution is dark brown/black, add activated carbon (1-2% w/w) and reflux for 5 minutes.
- Hot Filtration (Critical for Purity):
  - If undissolved particles remain (likely inorganic salts from nitration), filter the hot solution through a pre-warmed fluted filter paper or a heated sintered glass funnel.
  - Why: Cooling during filtration will cause premature crystallization on the filter, leading to yield loss.
- Crystallization:
  - Remove from heat and allow the flask to cool to room temperature undisturbed.
  - Mechanism:[2][3] Rapid cooling traps impurities inside the crystal lattice. Slow cooling builds a pure, stable crystal structure.[4]
  - Once at room temperature, place the flask in an ice bath (0-4°C) for 30 minutes to maximize yield.
- Isolation:
  - Collect crystals via vacuum filtration (Buchner funnel).[1][3][5]
  - Wash: Rinse the filter cake with ice-cold ethanol.

© 2026 BenchChem. All rights reserved.

- Caution: Do not use room-temperature solvent for washing, as it will redissolve your product.

- Drying:
  - Dry in a vacuum oven at 50°C. Ensure all solvent is removed, as trapped ethanol can depress the melting point.

Module 3: Troubleshooting Guide

Issue 1: "The product is oiling out instead of crystallizing."

- Diagnosis: The solution is likely too concentrated, or the melting point of the solvated product is lower than the boiling point of the solvent. This is common with amides.

- Corrective Action:
  - Reheat to redissolve the oil.
  - Add a small amount of extra solvent (10-15% more).
  - Seed the solution: Add a tiny crystal of pure product (if available) or scratch the inner wall of the flask with a glass rod to provide nucleation sites.
  - Cool very slowly (wrap the flask in a towel to insulate).

Issue 2: "The crystals are still colored (Yellow/Orange is normal, Brown is not)."

- Diagnosis: Nitro compounds are inherently yellow. However, dark brown or muddy colors indicate oxidative tars or azo-coupling byproducts.

- Corrective Action:
  - Perform a carbon treatment.[5] Dissolve the crystals in hot ethanol, add activated charcoal, reflux for 5 mins, and hot filter.

© 2026 BenchChem. All rights reserved.

- Warning: Do not use too much carbon, as it can adsorb the nitrobenzamide product, reducing yield.

Issue 3: "Low Recovery Yield (<50%)."

- Diagnosis: Too much solvent was used, or the mother liquor still holds significant product.
- Corrective Action:
  - Concentrate the mother liquor (filtrate) using a rotary evaporator to half its volume.
  - Cool and collect a "second crop" of crystals.
  - Note: The second crop is usually less pure and should be analyzed separately.

Module 4: Frequently Asked Questions (FAQs)

Q: Can I use water as a solvent? A: Pure water is generally poor for recrystallizing this compound. The nitro and methyl groups make it sufficiently lipophilic that it is insoluble in cold water and may decompose (hydrolyze) if boiled in water for long periods. However, water can be used as a co-solvent (added dropwise to a hot ethanol solution until turbidity appears) to force precipitation.

Q: How do I verify the purity of the final crystal? A:

- Melting Point: A sharp melting point (range < 2°C) is the primary indicator of purity. Nitrobenzamides typically melt between 140°C and 180°C (verify specific isomer value with analytical standard). Broad ranges indicate wetness or impurities.
- TLC (Thin Layer Chromatography): Run silica TLC using Ethyl Acetate:Hexane (1:1). A single spot under UV light confirms purity. Impurities like the starting acid will trail or stay at the baseline.

Q: What if my starting material (2-methoxy-4-methylbenzoic acid) is present? A: If the acid precursor is a contaminant, wash the isolated solid with a dilute Sodium Bicarbonate ($NaHCO_3$) solution. The acid will convert to its water-soluble salt and wash away, while the amide remains solid.

© 2026 BenchChem. All rights reserved.

Impurity Fate Map

Understanding where impurities go is vital for process control.

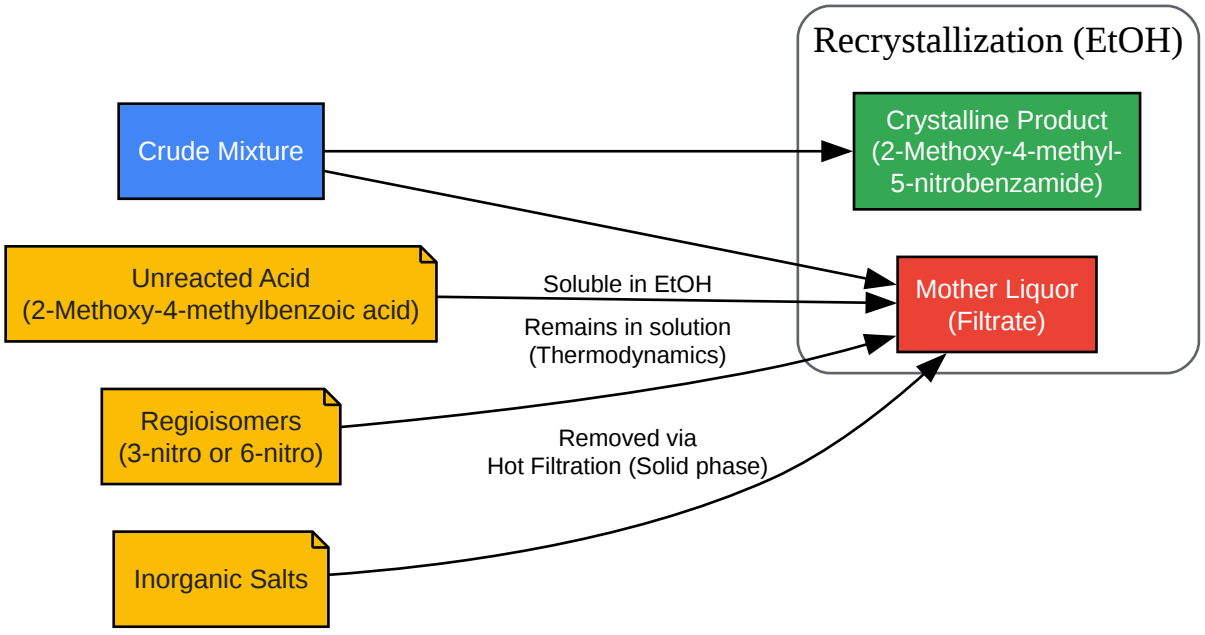

Click to download full resolution via product page

Figure 2: Separation logic for common impurities.

References

- Sigma-Aldrich.2-Methoxy-4-nitrobenzoic acid (Precursor Data). Retrieved from .
- National Institute of Standards and Technology (NIST).Nitrobenzamide Derivatives - Thermochemical Data. Retrieved from .
- Vogel, A. I.Vogel's Textbook of Practical Organic Chemistry. (5th Edition). Longman Scientific & Technical.
- PubChem.2-Methoxy-5-methyl-4-nitrobenzenamine (Related Structure Properties). Retrieved from .
- Massachusetts Institute of Technology (MIT) OpenCourseWare.Recrystallization Guide. Retrieved from .

© 2026 BenchChem. All rights reserved.

Disclaimer: This guide is intended for qualified scientific personnel. Always review the Safety Data Sheet (SDS) for **2-Methoxy-4-methyl-5-nitrobenzamide** before handling. Nitro compounds can be explosive under extreme conditions; avoid open flames and excessive heat.

Need Custom Synthesis?

BenchChem offers custom synthesis for rare earth carbides and specific isotopiclabeling.

Email: info@benchchem.com or Request Quote Online.

Sources

- 1. people.chem.umass.edu [people.chem.umass.edu]
- 2. 62726-03-8|2-Methoxy-4-nitrobenzamide|BLD Pharm [bldpharm.com]
- 3. ocw.mit.edu [ocw.mit.edu]
- 4. Home Page [chem.ualberta.ca]
- 5. chem.hbcse.tifr.res.in [chem.hbcse.tifr.res.in]
- To cite this document: BenchChem. [Technical Support Center: Purification of 2-Methoxy-4-methyl-5-nitrobenzamide]. BenchChem, [2026]. [Online PDF]. Available at: [https://www.benchchem.com/product/b1431649/docs#technical-support-center-purification-of-2-methoxy-4-methyl-5-nitrobenzamide]

Disclaimer & Data Validity:

The information provided in this document is for Research Use Only (RUO) and is strictly not intended for diagnostic or therapeutic procedures. While BenchChem strives to provide accurate protocols, we make no warranties, express or implied, regarding the fitness of this product for every specific experimental setup.

Technical Support: The protocols provided are for reference purposes. Unsure if this reagent suits your experiment?

Need Industrial/Bulk Grade? Request Custom Synthesis Quote

© 2026 BenchChem. All rights reserved.

BenchChem

Our mission is to be the trusted global source of essential and advanced chemicals, empowering scientists and researchers to drive progress in science and industry.

Contact

Address: 3281 E Guasti Rd

Ontario, CA 91761, United States

Phone: (601) 213-4426

Email: info@benchchem.com

Contact our Ph.D. Support Team for a compatibility check

© 2026 BenchChem. All rights reserved.