Introduction: The Central Role of a Key Structural Motif in Cardiovascular Medicine

Author: BenchChem Technical Support Team. **Date**: May 2026

Compound of Interest

Compound Name:	*2'-[(1H-Tetrazol-5-yl)biphenyl-4-yl]methanol*
CAS No.:	*160514-13-6*
Cat. No.:	*B143096*

Get Quote

The biphenyl tetrazole moiety is the cornerstone of a blockbuster class of antihypertensive drugs known as angiotensin II receptor blockers (ARBs), or "sartans".[1][2] These drugs, including Losartan, Valsartan, and Irbesartan, function by selectively antagonizing the angiotensin II type 1 (AT1) receptor, a key component of the renin-angiotensin-aldosterone system (RAAS) that regulates blood pressure.[1][3][4][5][6] The molecule **2'-[(1H-Tetrazol-5-yl)biphenyl-4-yl]methanol** is a critical intermediate and a common impurity in the synthesis of these life-saving medications.[7][8]

Mastery of the chemical reactions used to construct and derivatize this molecule is therefore of paramount importance to researchers in medicinal chemistry and process development. The formation of the core biaryl structure and the subsequent introduction of nitrogen-containing functional groups are typically achieved through sophisticated palladium-catalyzed cross-coupling reactions.

This document serves as a detailed guide for researchers, providing both the theoretical underpinnings and practical, field-tested protocols for two of the most powerful and relevant

© 2026 BenchChem. All rights reserved.

transformations in this context: the Suzuki-Miyaura coupling for C-C bond formation and the Buchwald-Hartwig amination for C-N bond formation.

Compound Profile: **2'-[(1H-Tetrazol-5-yl)biphenyl-4-yl]methanol**

Property	Value	Reference
CAS Number	160514-13-6	[7][9][10]
Molecular Formula	$C_{14}H_{12}N_4O$	[9][10]
Molecular Weight	252.27 g/mol	[9][10]
Primary Use	Intermediate in sartan drug synthesis	[2][7]

Part 1: Synthesis of the Biphenyl Core via Suzuki-Miyaura Coupling

The Suzuki-Miyaura reaction is the undisputed workhorse for the synthesis of biaryl and substituted biaryl systems in the pharmaceutical industry.[11] It involves the palladium-catalyzed cross-coupling of an organoboron species (typically a boronic acid or ester) with an organohalide or triflate.[12] Its high functional group tolerance, the mild reaction conditions, and the commercial availability of a vast array of starting materials make it the premier choice for constructing the central biphenyl scaffold of the target molecule.

Mechanistic Rationale

The catalytic cycle of the Suzuki coupling is a well-understood, three-stage process. Understanding this mechanism is crucial for troubleshooting and optimizing the reaction. The cycle begins with a Pd(0) species, which is the active catalyst.

- Oxidative Addition: The Pd(0) catalyst inserts into the carbon-halide bond of the aryl halide, forming a new Pd(II) complex. This is often the rate-determining step of the cycle.[12]
- Transmetalation: A base activates the organoboron compound, forming a borate complex. This complex then transfers its organic group to the Pd(II) center, displacing the halide and forming a new diorganopalladium(II) complex.

© 2026 BenchChem. All rights reserved.

- Reductive Elimination: The two organic groups on the palladium center couple and are eliminated from the metal, forming the desired C-C bond and regenerating the active Pd(0) catalyst, which re-enters the cycle.[12]

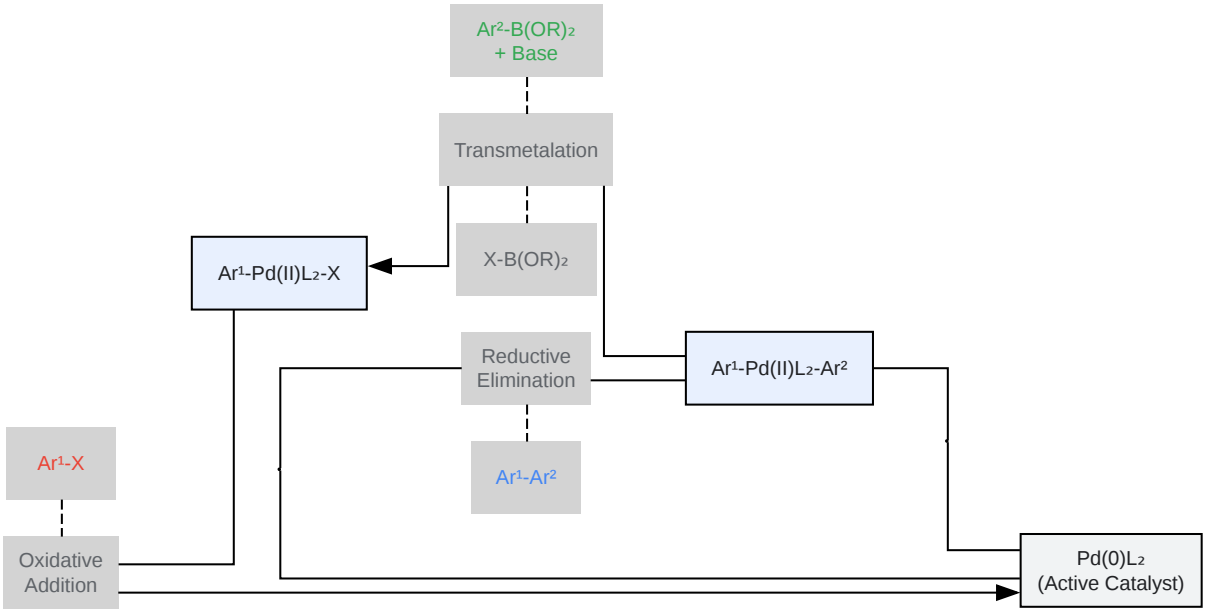

Figure 1: Suzuki-Miyaura Catalytic Cycle

Click to download full resolution via product page

Caption: Figure 1: Suzuki-Miyaura Catalytic Cycle

Experimental Protocol: Synthesis of the Biphenyl Core

This protocol describes the coupling of a protected 5-(2-bromophenyl)-1H-tetrazole with (4-(hydroxymethyl)phenyl)boronic acid. The tetrazole and alcohol functionalities require protection (e.g., with a trityl (Tr) and TBDMS group, respectively) to prevent side reactions and catalyst inhibition.

© 2026 BenchChem. All rights reserved.

Parameter	Specification	Purpose / Rationale
Aryl Halide	1-Trityl-5-(2-bromophenyl)-1H-tetrazole	The trityl group protects the acidic N-H of the tetrazole.
Boronic Acid	(4-((tert-butyldimethylsilyl)oxy)methyl)phenyl)boronic acid	TBDMS protects the benzylic alcohol.
Catalyst	$Pd(PPh_3)_4$ (1-3 mol%)	A reliable, commercially available Pd(0) catalyst.
Base	K_2CO_3 (2.0 - 3.0 equiv.)	A mild inorganic base sufficient for activating the boronic acid.
Solvent	Toluene / Ethanol / H_2O (e.g., 4:1:1 v/v)	A biphasic system to dissolve both organic and inorganic reagents.
Temperature	80-90 °C	Provides sufficient thermal energy for the reaction to proceed efficiently.
Reaction Time	4-12 hours	Monitored by TLC or LC-MS for completion.

Step-by-Step Procedure:

- Inert Atmosphere: To a flame-dried round-bottom flask equipped with a reflux condenser and magnetic stir bar, add 1-Trityl-5-(2-bromophenyl)-1H-tetrazole (1.0 equiv.), (4-((tert-butyldimethylsilyl)oxy)methyl)phenyl)boronic acid (1.1 equiv.), and K_2CO_3 (2.5 equiv.).
- Degassing: Seal the flask with a septum and cycle between vacuum and argon or nitrogen gas at least three times to ensure an inert atmosphere. This is critical to prevent oxidation and deactivation of the Pd(0) catalyst.
- Solvent and Catalyst Addition: Add the degassed solvent mixture (Toluene/Ethanol/H_2O) via cannula, followed by the addition of $Pd(PPh_3)_4$ (0.02 equiv.). The solution will typically turn yellow or orange.

© 2026 BenchChem. All rights reserved.

- Reaction: Heat the mixture to 85 °C with vigorous stirring. Monitor the reaction progress by taking small aliquots and analyzing via TLC or LC-MS until the aryl bromide starting material is consumed.
- Work-up: Cool the reaction to room temperature. Dilute with ethyl acetate and water. Separate the organic layer, and wash sequentially with water and brine.
- Purification: Dry the organic layer over anhydrous Na_2SO_4, filter, and concentrate under reduced pressure. The crude product is then purified by flash column chromatography on silica gel.
- Deprotection: The resulting protected biphenyl product is then subjected to standard deprotection conditions (e.g., trifluoroacetic acid for the trityl group and TBAF for the TBDMS group) to yield the final **2'-[(1H-Tetrazol-5-yl)biphenyl-4-yl]methanol**.

Part 2: C-N Bond Formation via Buchwald-Hartwig Amination

While not typically used for the synthesis of the core sartan structure itself, the Buchwald-Hartwig amination is an indispensable tool for creating analogues and derivatives by forming C-N bonds.[13] This palladium-catalyzed reaction couples an aryl halide or triflate with a primary or secondary amine, offering a broad scope that traditional methods like nucleophilic aromatic substitution cannot match.[13][14]

Mechanistic Rationale

The Buchwald-Hartwig catalytic cycle shares mechanistic similarities with the Suzuki coupling but is distinct in its use of an amine nucleophile and a strong base.

- Oxidative Addition: A Pd(0) complex adds to the aryl halide (Ar-X) to form a Pd(II) intermediate.
- Amine Coordination & Deprotonation: The amine (R_2NH) coordinates to the palladium center. A strong base then deprotonates the coordinated amine to form a palladium amide complex. This is a critical step, and the choice of base is vital.

© 2026 BenchChem. All rights reserved.

- Reductive Elimination: The aryl group and the amido group are eliminated from the palladium, forming the desired C-N bond and regenerating the Pd(0) catalyst.[15] Bulky, electron-rich phosphine ligands are essential for promoting this final, product-forming step.

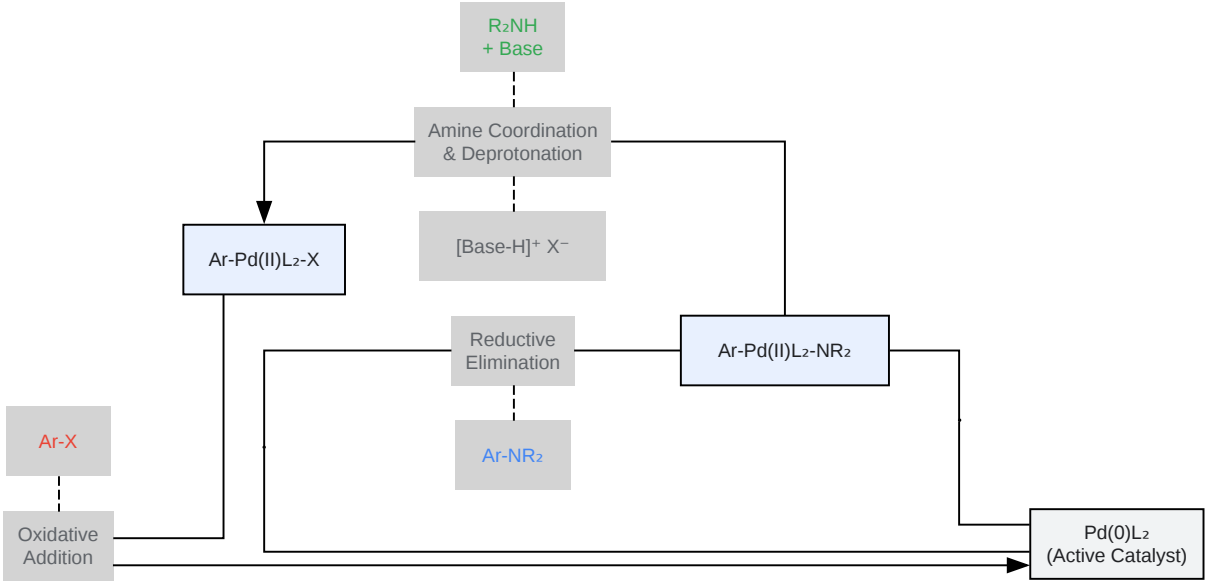

Figure 2: Buchwald-Hartwig Catalytic Cycle

Click to download full resolution via product page

Caption: Figure 2: Buchwald-Hartwig Catalytic Cycle

Experimental Protocol: Hypothetical N-Arylation

This protocol outlines a hypothetical derivatization, coupling an aryl bromide (a functionalized version of the core molecule) with a secondary amine. Modern catalyst systems using pre-formed catalysts and specialized ligands are often preferred for their reliability and efficiency.

© 2026 BenchChem. All rights reserved.

Parameter	Specification	Purpose / Rationale
Aryl Halide	Bromo-functionalized biphenyl tetrazole (1.0 equiv.)	The C-Br bond is the site of coupling.
Amine	Morpholine (1.2 equiv.)	A representative secondary amine nucleophile.
Catalyst System	$Pd_2(dba)_3$ (1-2 mol%) + XPhos (2-4 mol%)	A powerful, general catalyst system for C-N coupling.
Base	NaOtBu (1.4 equiv.)	A strong, non-nucleophilic base required for deprotonating the amine.
Solvent	Anhydrous Toluene or 2-MeTHF	Aprotic solvent is essential. 2-MeTHF is a greener alternative to THF or dioxane.[16]
Temperature	100-110 °C	Higher temperatures are often needed for C-N coupling.
Reaction Time	6-24 hours	Can be slower than Suzuki couplings; requires monitoring.

Step-by-Step Procedure:

- Glovebox Setup: Due to the air and moisture sensitivity of the catalyst, ligand, and base, this reaction is best assembled in an inert atmosphere glovebox.
- Reagent Addition: In the glovebox, add the aryl bromide (1.0 equiv.), the palladium source (e.g., $Pd_2(dba)_3$, 0.01 equiv.), the ligand (e.g., XPhos, 0.025 equiv.), and the base (NaOtBu, 1.4 equiv.) to a dry reaction vial or flask.
- Solvent and Amine: Add anhydrous solvent, followed by the amine (1.2 equiv.). Seal the vessel tightly before removing it from the glovebox.
- Reaction: Place the sealed vessel in a pre-heated heating block at 110 °C and stir.

© 2026 BenchChem. All rights reserved.

- Monitoring and Work-up: Monitor the reaction by LC-MS. Upon completion, cool to room temperature and quench carefully by adding saturated aqueous NH_4Cl. Extract the product with an organic solvent like ethyl acetate.

- Purification: Wash the combined organic layers with brine, dry over Na_2SO_4, and concentrate. The crude material is typically purified by silica gel chromatography to yield the desired N-aryl product.

Expert Insights and Troubleshooting

- Ligand Selection is Key: For Suzuki coupling, bulky, electron-rich phosphine ligands can accelerate the reaction, especially for challenging substrates.[11] In Buchwald-Hartwig amination, the ligand choice is even more critical to facilitate the difficult reductive elimination step.

- The Enemy: Oxygen: Palladium(0) catalysts are readily oxidized to an inactive Pd(II) state by atmospheric oxygen. Meticulous degassing of solvents and the use of an inert atmosphere are non-negotiable for success.

- Base Sensitivity: In Buchwald-Hartwig reactions, strong bases like sodium tert-butoxide can be incompatible with base-sensitive functional groups like esters.[15] In such cases, weaker bases like K_3PO_4 or Cs_2CO_3 may be employed, though often at the cost of reaction efficiency.

- Protecting Groups: The acidic N-H of the tetrazole ring can interfere with both coupling reactions. Protection, commonly with a trityl group, is a standard and necessary strategy to ensure high yields and clean reactions.

By understanding the mechanisms and applying these robust protocols, researchers can effectively utilize modern cross-coupling chemistry to synthesize and explore the rich chemical space surrounding the **2'-[(1H-Tetrazol-5-yl)biphenyl-4-yl]methanol** scaffold, paving the way for the discovery of next-generation therapeutics.

References

- Dalaijargal, B., Mi, L., Wu, Z., Yin, Y., Liang, H., Qiu, Y., Yan, Y., Jin, H., & Chen, Z. (2022).
- BenchChem. (2025).

© 2026 BenchChem. All rights reserved.

- Nageswar, Y. V. D., & Srujana, K. (2010). Efficient and improved synthesis of Telmisartan. Beilstein Journal of Organic Chemistry, 6, 23. [Link]
- Pati, H. N. (2014). A Review on Synthesis of Antihypertensive Sartan Drugs. International Journal of Pharmaceutical Sciences and Research. [Link]
- de Gasparo, M., & Levens, N. R. (2000). Angiotensin II AT1 Receptor Antagonists. Clinical Implications of Active Metabolites. Journal of Medicinal Chemistry, 43(10), 1673–1683. [Link]
- Synthesis method of sartan anti-hypertensive medicament intermediate 2-cyan-4'-methyl diphenyl. (n.d.).
- Advent Chembio. (n.d.). 2'-(1H-Tetrazol-5-yl)-[1,1'-biphenyl]-4-yl)methanol. Advent Chembio. [Link]
- LookChem. (n.d.). (2'-(1H-Tetrazol-5-yl)biphenyl-4-yl)methanol. LookChem. [Link]
- Wikipedia. (n.d.). Angiotensin II receptor blocker. Wikipedia. [Link]
- Zhang, C., et al. (2022). Small molecule angiotensin converting enzyme inhibitors: A medicinal chemistry perspective. Frontiers in Chemistry, 10, 1033230. [Link]
- Mayo Clinic. (n.d.). Angiotensin II receptor blockers. Mayo Clinic. [Link]
- Wikipedia. (n.d.). Buchwald–Hartwig amination. Wikipedia. [Link]
- Deranged Physiology. (2023). ACE inhibitors and angiotensin receptor blockers. Deranged Physiology. [Link]
- Khan, I., et al. (2023). Synthesis, Characterization, and Biological Evaluation of 2-(N-((2'-(2H-tetrazole-5-yl)-[1,1'-biphenyl]-4yl)-methyl)-pentanamido)-3-methyl Butanoic Acid Derivatives. Molecules, 28(4), 1908. [Link]
- Chemistry LibreTexts. (2023). Buchwald-Hartwig Amination. Chemistry LibreTexts. [Link]
- ACS GCI Pharmaceutical Roundtable. (n.d.). Buchwald-Hartwig Amination. ACS GCI Pharmaceutical Roundtable Reagent Guides. [Link]

© 2026 BenchChem. All rights reserved.

- Dander, J. E., et al. (2018). Green Solvent Selection for Acyl Buchwald-Hartwig Cross-Coupling of Amides (Transamidation). ACS Sustainable Chemistry & Engineering, 6(11), 14339–14343. [Link]
- Cao, Q., Nicholson, W. I., & Browne, D. L. (2019). Robust Buchwald-Hartwig amination enabled by ball-milling. Organic & Biomolecular Chemistry, 17(8), 2136-2141. [Link]
- Chemistry LibreTexts. (2024). Suzuki-Miyaura Coupling. Chemistry LibreTexts. [Link]
- Peyron, C., et al. (2020). A Versatile System of Solvent, Catalyst, and Ligand for Challenging Biphenyl Synthesis Through Suzuki-Miyaura Reactions. ChemistryOpen, 9(1), 10–14. [Link]
- PubChemLite. (n.d.). (2'-(1h-tetrazol-5-yl)biphenyl-4-yl)methanol. PubChemLite. [Link]
- TU Wien's reposiTUm. (n.d.). Suzuki Cross Coupling of 4-Bromobenzyl-(1H). TU Wien's reposiTUm. [Link]

Need Custom Synthesis?

BenchChem offers custom synthesis for rare earth carbides and specific isotopiclabeling.

Email: info@benchchem.com or Request Quote Online.

Sources

- 1. pdf.benchchem.com [pdf.benchchem.com]
- 2. scispace.com [scispace.com]
- 3. Efficient and improved synthesis of Telmisartan - PMC [pmc.ncbi.nlm.nih.gov]
- 4. pubs.acs.org [pubs.acs.org]
- 5. Angiotensin II receptor blocker - Wikipedia [en.wikipedia.org]
- 6. Angiotensin II receptor blockers - Mayo Clinic [mayoclinic.org]
- 7. lookchem.com [lookchem.com]
- 8. 2'-[(1H-Tetrazol-5-yl)biphenyl-4-yl]Methanol | 160514-13-6 [amp.chemicalbook.com]
- 9. Shop 2-1H-Tetrazol-5-yl-11-Biphenyl for Chemical Synthesis Online | Advent [adventchembio.com]

© 2026 BenchChem. All rights reserved.

- 10. biosynth.com [biosynth.com]
- 11. A Versatile System of Solvent, Catalyst, and Ligand for Challenging Biphenyl Synthesis Through Suzuki-Miyaura Reactions - PMC [pmc.ncbi.nlm.nih.gov]
- 12. chem.libretexts.org [chem.libretexts.org]
- 13. Buchwald–Hartwig amination - Wikipedia [en.wikipedia.org]
- 14. Buchwald-Hartwig Amination - Wordpress [reagents.acsgcipr.org]
- 15. chem.libretexts.org [chem.libretexts.org]
- 16. par.nsf.gov [par.nsf.gov]

- To cite this document: BenchChem. [Introduction: The Central Role of a Key Structural Motif in Cardiovascular Medicine]. BenchChem, [2026]. [Online PDF]. Available at: [https://www.benchchem.com/product/b143096/docs#introduction-the-central-role-of-a-key-structural-motif-in-cardiovascular-medicine]

Disclaimer & Data Validity:

The information provided in this document is for Research Use Only (RUO) and is strictly not intended for diagnostic or therapeutic procedures. While BenchChem strives to provide accurate protocols, we make no warranties, express or implied, regarding the fitness of this product for every specific experimental setup.

Technical Support: The protocols provided are for reference purposes. Unsure if this reagent suits your experiment?

Need Industrial/Bulk Grade? Request Custom Synthesis Quote

BenchChem

Our mission is to be the trusted global source of essential and advanced chemicals, empowering scientists and researchers to drive progress in science and industry.

Contact

Address: 3281 E Guasti Rd

Ontario, CA 91761, United States

Phone: (601) 213-4426

Email: info@benchchem.com

© 2026 BenchChem. All rights reserved.

Contact our Ph.D. Support Team for a compatibility check

© 2026 BenchChem. All rights reserved.