Application Notes and Protocols for Ethyltributylphosphonium Diethylphosphate as a Phase Transfer Catalyst

Author: BenchChem Technical Support Team. **Date**: May 2026

Compound of Interest

Compound Name:	*Ethyltributylphosphonium diethylphosphate*
CAS No.:	*20445-94-7*
Cat. No.:	*B1427270*

Get Quote

For Researchers, Scientists, and Drug Development Professionals

Introduction

In the landscape of modern organic synthesis, the quest for efficient, selective, and environmentally benign reaction methodologies is paramount. Phase transfer catalysis (PTC) has emerged as a powerful technique to bridge the reactivity gap between immiscible reactants, thereby accelerating reactions, enhancing yields, and often obviating the need for harsh solvents or reaction conditions.[1] **Ethyltributylphosphonium diethylphosphate**, a phosphonium-based ionic liquid, is a versatile and highly effective phase transfer catalyst.[1] Its unique combination of a lipophilic phosphonium cation and a diethyl phosphate anion imparts desirable properties such as high thermal and chemical stability, making it a valuable tool in the synthesis of pharmaceuticals, agrochemicals, and other fine chemicals.[1]

This comprehensive guide, designed for researchers, scientists, and drug development professionals, provides an in-depth exploration of **ethyltributylphosphonium**

© 2026 BenchChem. All rights reserved.

diethylphosphate as a phase transfer catalyst. We will delve into its mechanism of action, outline its key advantages, and provide detailed, adaptable protocols for its application in common and impactful organic transformations.

Chemical and Physical Properties of Ethyltributylphosphonium Diethylphosphate

A thorough understanding of the catalyst's properties is fundamental to its effective application.

Property	Value	Source
CAS Number	20445-94-7	[2]
Molecular Formula	$C_{18}H_{42}O_4P_2$	[2]
Molecular Weight	384.47 g/mol	[2]
Appearance	Colorless to pale yellow liquid	[1]
Purity	>95%	
Density	1.01 g/cm³ (at 25 °C)	
Viscosity	481 cP (at 25 °C)	
Solubility	Soluble in many organic solvents	[1]

The Role and Advantages of Phosphonium-Based Ionic Liquids in Phase Transfer Catalysis

Phase transfer catalysis operates on the principle of transporting a reactive species (typically an anion) from an aqueous or solid phase into an organic phase where the substrate resides. The phase transfer catalyst, possessing both hydrophilic and lipophilic characteristics, facilitates this transport.[1]

Phosphonium-based ionic liquids, such as **ethyltributylphosphonium diethylphosphate**, offer distinct advantages over their more common ammonium-based counterparts:

© 2026 BenchChem. All rights reserved.

- Enhanced Thermal Stability: Phosphonium salts generally exhibit greater thermal stability, allowing for reactions to be conducted at higher temperatures without significant catalyst degradation.
- Greater Chemical Stability: They are often more resistant to degradation under strongly basic or acidic conditions.
- Tunable Properties: The properties of ionic liquids can be finely tuned by modifying the cation and anion, allowing for the design of catalysts optimized for specific applications.

Mechanism of Action: A Closer Look

The efficacy of **ethyltributylphosphonium diethylphosphate** as a phase transfer catalyst is rooted in its ability to form a lipophilic ion pair with the reacting anion. This process can be visualized in the following catalytic cycle for a typical nucleophilic substitution reaction.

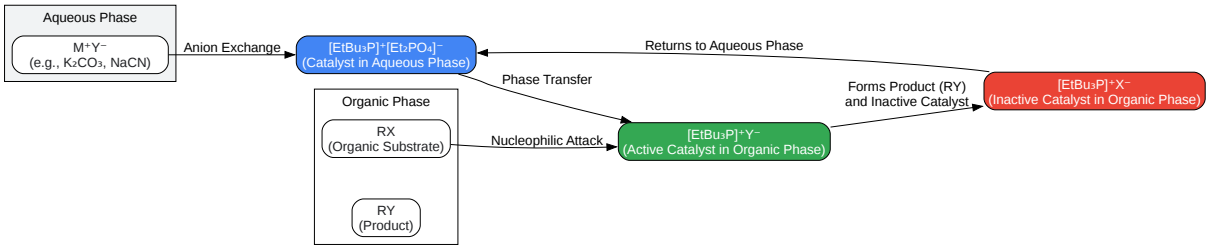

Click to download full resolution via product page

Caption: Catalytic cycle of **ethyltributylphosphonium diethylphosphate** in a nucleophilic substitution reaction.

© 2026 BenchChem. All rights reserved.

Application Note 1: O-Alkylation of Phenols

The O-alkylation of phenols to produce ethers is a fundamental transformation in the synthesis of pharmaceuticals, agrochemicals, and fragrances. The use of **ethyltributylphosphonium diethylphosphate** as a phase transfer catalyst allows this reaction to be carried out efficiently under mild conditions.

Experimental Protocol: Synthesis of 2-Butoxynaphthalene

This protocol details the synthesis of 2-butoxynaphthalene from 2-naphthol and 1-bromobutane.

Materials

- 2-Naphthol
- 1-Bromobutane
- **Ethyltributylphosphonium diethylphosphate**
- Potassium Carbonate (K_2CO_3), anhydrous
- Toluene
- Deionized water
- Diethyl ether
- Saturated sodium chloride solution (brine)
- Anhydrous magnesium sulfate ($MgSO_4$) or sodium sulfate (Na_2SO_4)

Equipment

- Round-bottom flask
- Reflux condenser

© 2026 BenchChem. All rights reserved.

- Magnetic stirrer and stir bar
- Heating mantle or oil bath
- Separatory funnel
- Rotary evaporator
- Standard laboratory glassware

Procedure

- Reaction Setup: In a round-bottom flask equipped with a magnetic stir bar and a reflux condenser, combine 2-naphthol (e.g., 1.44 g, 10 mmol), potassium carbonate (e.g., 2.76 g, 20 mmol), and **ethyltributylphosphonium diethylphosphate** (e.g., 0.192 g, 0.5 mmol, 5 mol%).
- Solvent Addition: Add toluene (20 mL) and deionized water (10 mL) to the flask.
- Reactant Addition: Add 1-bromobutane (e.g., 1.64 g, 12 mmol) to the reaction mixture.
- Reaction: Heat the mixture to reflux (approximately 90-100 °C) with vigorous stirring. Monitor the reaction progress by Thin Layer Chromatography (TLC) or Gas Chromatography (GC). The reaction is typically complete within 4-8 hours.
- Workup:
  - Cool the reaction mixture to room temperature.
  - Transfer the mixture to a separatory funnel and add 20 mL of deionized water.
  - Separate the organic layer.
  - Extract the aqueous layer with diethyl ether (2 x 20 mL).
  - Combine the organic layers and wash with brine (20 mL).
  - Dry the combined organic layer over anhydrous magnesium sulfate or sodium sulfate.

© 2026 BenchChem. All rights reserved.

- Filter to remove the drying agent.

- Purification:
  - Concentrate the filtrate under reduced pressure using a rotary evaporator to obtain the crude product.
  - Purify the crude product by column chromatography on silica gel using a suitable eluent system (e.g., hexane/ethyl acetate) or by recrystallization to afford the pure 2-butoxynaphthalene.

Expected Results and Troubleshooting

Parameter	Expected Outcome
Yield	85-95%
Purity	>98% after purification
Reaction Time	4-8 hours

Troubleshooting:

- Low Yield:
  - Ensure the potassium carbonate is anhydrous.
  - Increase the stirring speed to improve mixing between the phases.
  - Consider increasing the catalyst loading to 10 mol%.
- Incomplete Reaction:
  - Extend the reaction time.
  - Ensure the reaction temperature is maintained at reflux.

© 2026 BenchChem. All rights reserved.

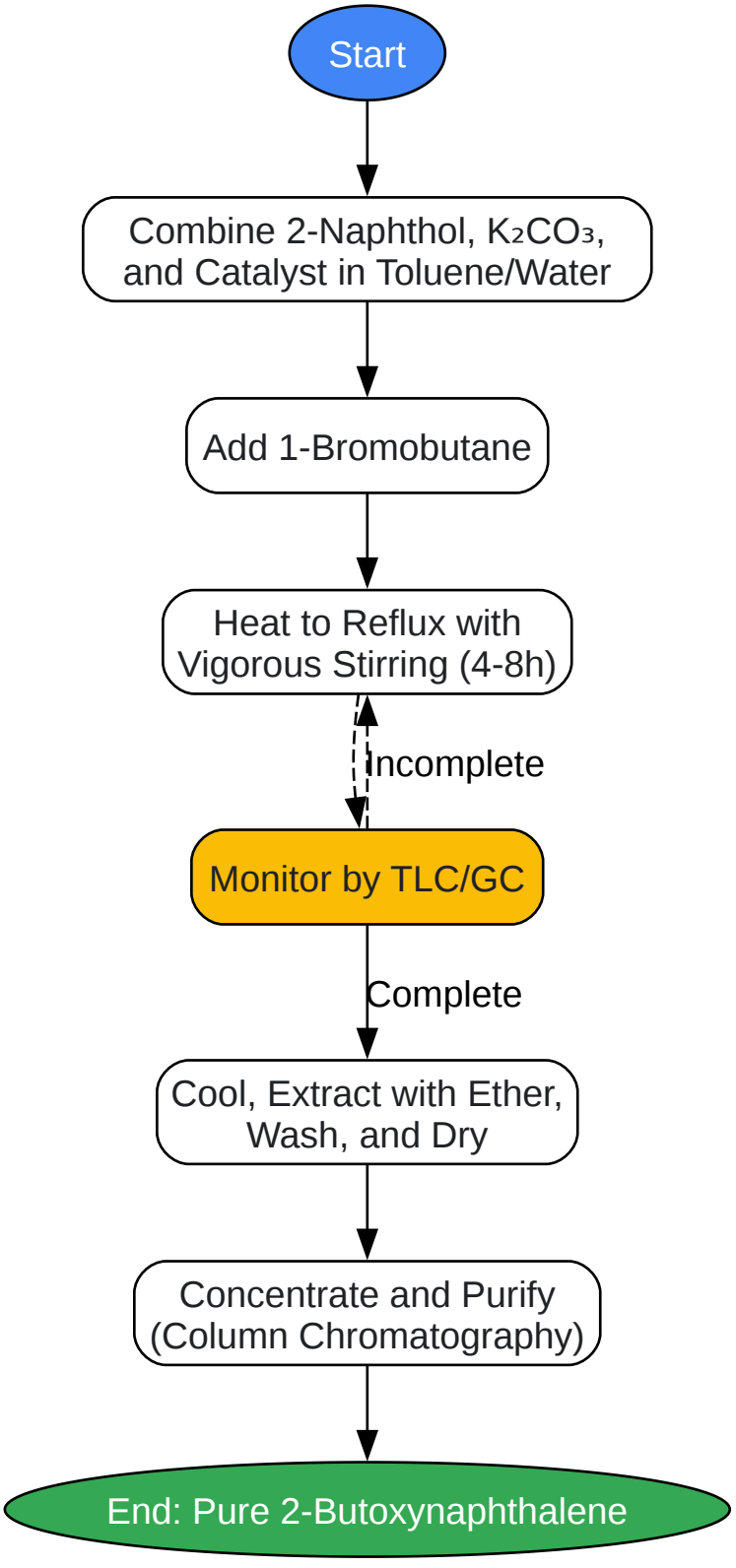

Click to download full resolution via product page

Caption: Workflow for the O-alkylation of 2-naphthol.

© 2026 BenchChem. All rights reserved.

Application Note 2: C-Alkylation of Active Methylene Compounds

The C-alkylation of active methylene compounds is a cornerstone of carbon-carbon bond formation in organic synthesis. **Ethyltributylphosphonium diethylphosphate** can effectively catalyze these reactions, enabling the synthesis of a wide array of valuable intermediates.

Experimental Protocol: Synthesis of Diethyl 2-Butylmalonate

This protocol describes the C-alkylation of diethyl malonate with 1-bromobutane.

Materials

- Diethyl malonate
- 1-Bromobutane
- **Ethyltributylphosphonium diethylphosphate**
- Potassium carbonate (K_2CO_3), anhydrous
- Acetonitrile
- Deionized water
- Diethyl ether
- Saturated sodium chloride solution (brine)
- Anhydrous magnesium sulfate ($MgSO_4$) or sodium sulfate (Na_2SO_4)

Equipment

- Round-bottom flask
- Magnetic stirrer and stir bar
- Heating mantle or oil bath

© 2026 BenchChem. All rights reserved.

- Separatory funnel
- Rotary evaporator
- Standard laboratory glassware

Procedure

- Reaction Setup: In a round-bottom flask equipped with a magnetic stir bar, combine diethyl malonate (e.g., 1.60 g, 10 mmol), potassium carbonate (e.g., 2.76 g, 20 mmol), and **ethyltributylphosphonium diethylphosphate** (e.g., 0.192 g, 0.5 mmol, 5 mol%).
- Solvent Addition: Add acetonitrile (20 mL) to the flask.
- Reactant Addition: Add 1-bromobutane (e.g., 1.64 g, 12 mmol) to the reaction mixture.
- Reaction: Stir the mixture vigorously at room temperature. Monitor the reaction progress by TLC or GC. The reaction is typically complete within 6-12 hours.
- Workup:
  - Filter the reaction mixture to remove the inorganic salts.
  - Wash the solid residue with a small amount of acetonitrile.
  - Combine the filtrate and washings.
  - Concentrate the combined organic solution under reduced pressure.
  - Dissolve the residue in diethyl ether (30 mL) and wash with deionized water (2 x 15 mL) and then with brine (15 mL).
  - Dry the organic layer over anhydrous magnesium sulfate or sodium sulfate.
  - Filter to remove the drying agent.
- Purification:
  - Concentrate the filtrate under reduced pressure to obtain the crude product.

© 2026 BenchChem. All rights reserved.

- Purify the crude product by vacuum distillation or column chromatography on silica gel to afford the pure diethyl 2-butylmalonate.

Expected Results and Troubleshooting

Parameter	Expected Outcome
Yield	80-90%
Purity	>97% after purification
Reaction Time	6-12 hours

Troubleshooting:

- Dialkylation: If significant amounts of the dialkylated product are observed, consider using a larger excess of diethyl malonate or adding the 1-bromobutane slowly to the reaction mixture.
- Slow Reaction: The reaction can be gently heated (e.g., to 40-50 °C) to increase the rate.

© 2026 BenchChem. All rights reserved.

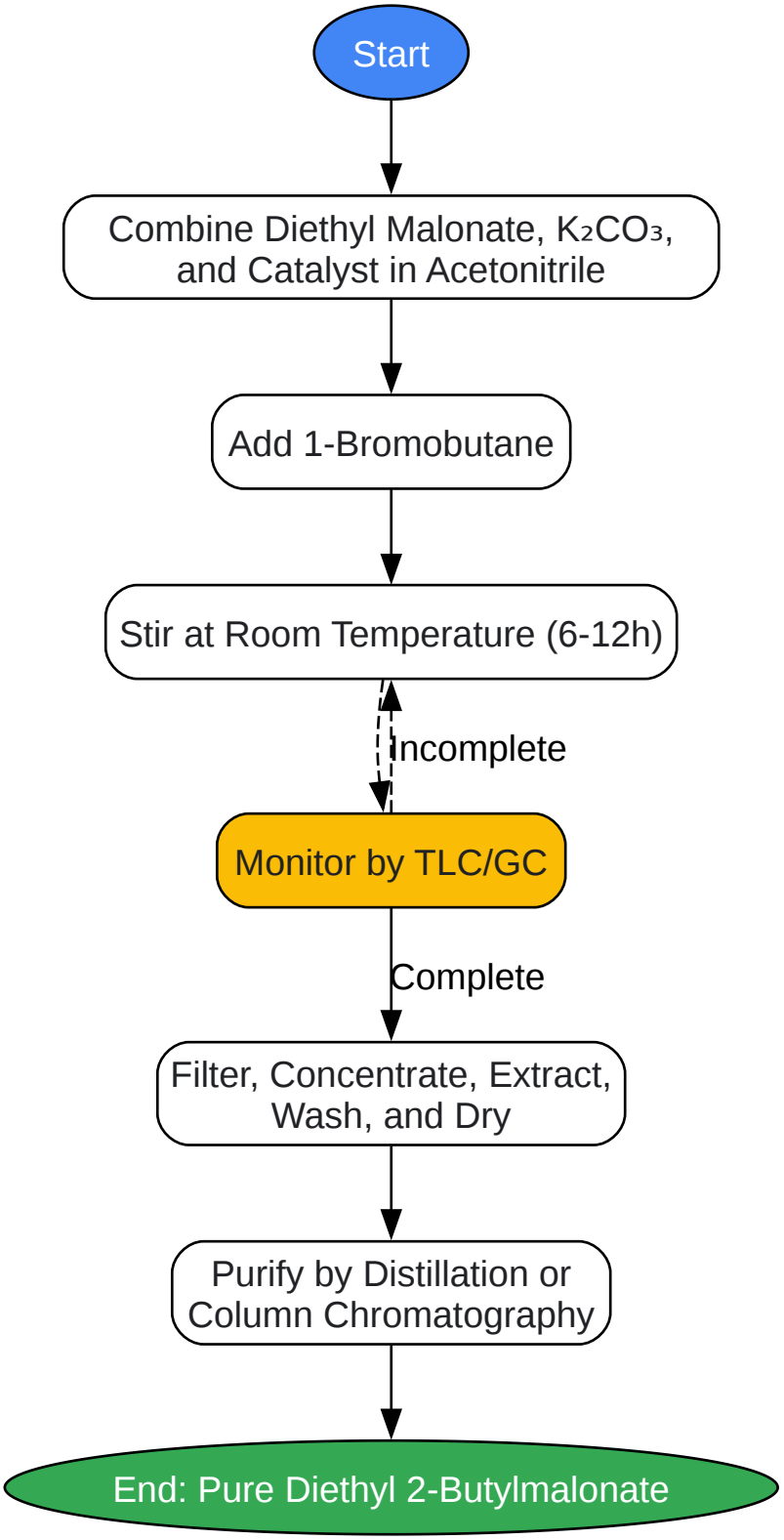

Click to download full resolution via product page

Caption: Workflow for the C-alkylation of diethyl malonate.

© 2026 BenchChem. All rights reserved.

Conclusion

Ethyltributylphosphonium diethylphosphate is a highly effective and versatile phase transfer catalyst with significant potential in organic synthesis. Its superior thermal and chemical stability, coupled with the general advantages of phase transfer catalysis, makes it an attractive choice for a wide range of applications in the pharmaceutical and chemical industries. The protocols provided herein serve as a robust starting point for researchers to explore the utility of this catalyst in their own synthetic endeavors. As with any catalytic system, optimization of reaction conditions for specific substrates is encouraged to achieve the best possible outcomes.

References

- Hiyka. (n.d.). Ethyltributylphosphonium diethyl phosphate. Retrieved from [Link]
- MDPI. (2022). Ionic Liquids: Advances and Applications in Phase Transfer Catalysis. Molecules, 27(19), 6206. Retrieved from [Link]
- ResearchGate. (2020). Applications of phosphonium-based ionic liquids in chemical processes. Journal of Molecular Liquids, 302, 112523. Retrieved from [Link]
- MDPI. (2021). Solid-Liquid Phase C-Alkylation of Active Methylene Containing Compounds under Microwave Conditions. Retrieved from [Link]
- ResearchGate. (2012). Phosphonium ionic liquids (PILs) as organocatalysts for green reactions: nucleophilic electrophilic cooperative catalysis. Science China Chemistry, 55(1), 60-68. Retrieved from [Link]
- PubChem. (n.d.). Phosphonium, tributylethyl-, diethyl phosphate (1:1). Retrieved from [Link]

Need Custom Synthesis?

BenchChem offers custom synthesis for rare earth carbides and specific isotopiclabeling.

Email: info@benchchem.com or Request Quote Online.

Sources

- 1. pdf.benchchem.com [pdf.benchchem.com]
- 2. Phosphonium, tributylethyl-, diethyl phosphate (1:1) | C18H42O4P2 | CID 60196373 - PubChem [pubchem.ncbi.nlm.nih.gov]
- To cite this document: BenchChem. [Application Notes and Protocols for Ethyltributylphosphonium Diethylphosphate as a Phase Transfer Catalyst]. BenchChem, [2026]. [Online PDF]. Available at: [https://www.benchchem.com/product/b1427270/docs#application-notes-and-protocols-for-ethyltributylphosphonium-diethylphosphate-as-a-phase-transfer-catalyst]

Disclaimer & Data Validity:

The information provided in this document is for Research Use Only (RUO) and is strictly not intended for diagnostic or therapeutic procedures. While BenchChem strives to provide accurate protocols, we make no warranties, express or implied, regarding the fitness of this product for every specific experimental setup.

Technical Support: The protocols provided are for reference purposes. Unsure if this reagent suits your experiment?

Need Industrial/Bulk Grade? Request Custom Synthesis Quote

BenchChem

Our mission is to be the trusted global source of essential and advanced chemicals, empowering scientists and researchers to drive progress in science and industry.

Contact

Address: 3281 E Guasti Rd

Ontario, CA 91761, United States

Phone: (601) 213-4426

Email: info@benchchem.com

Contact our Ph.D. Support Team for a compatibility check

© 2026 BenchChem. All rights reserved.

© 2026 BenchChem. All rights reserved.