Technical Support Center: Minimizing Byproduct Formation in Peptide Synthesis

Author: BenchChem Technical Support Team. **Date**: May 2026

Compound of Interest

Compound Name:	*D-Homophenylalanine tert-Butyl Ester*
CAS No.:	*740055-30-5*
Cat. No.:	*B1426014*

Get Quote

Welcome to the technical support center for peptide synthesis. This resource, designed for researchers, scientists, and drug development professionals, provides in-depth troubleshooting guides and frequently asked questions to help you minimize byproduct formation and optimize your synthetic outcomes. As Senior Application Scientists, we have compiled this guide based on established scientific principles and extensive field experience to address the most common challenges encountered in Solid Phase Peptide Synthesis (SPPS).

Frequently Asked Questions (FAQs)

This section provides quick answers to common questions regarding byproduct formation in peptide synthesis. For more detailed explanations and protocols, please refer to the comprehensive Troubleshooting Guides below.

Q1: My final peptide has a mass that is off by 1 Da. What could be the cause?

An increase or decrease of 1 Da in the mass of your peptide can be indicative of several side reactions. A +1 Da mass shift could result from the hydrolysis of a nitrile group, which can form

© 2026 BenchChem. All rights reserved.

from the dehydration of asparagine or glutamine side chains. A -1 Da mass shift is often associated with the formation of a pyroglutamate residue at the N-terminus of the peptide.

Q2: I am observing a significant amount of deletion sequences in my crude product. What are the likely causes?

Deletion sequences arise from incomplete coupling or deprotection steps during SPPS.[1] This can be due to factors such as steric hindrance, peptide aggregation, or suboptimal reaction conditions. Our troubleshooting guide on Deletion and Insertion Sequences provides detailed strategies to address this issue.

Q3: My peptide is showing poor solubility after cleavage. What can I do?

Poor solubility is often a consequence of peptide aggregation, which can occur both on-resin and in solution.[2] Strategies to mitigate this include the use of chaotropic salts, specialized resins, or the incorporation of backbone modifications like pseudoprolines.[2] Refer to our Aggregation troubleshooting guide for more information.

Q4: I am seeing a significant peak in my HPLC that corresponds to a peptide with the same mass but a different retention time. What is this?

This is a classic sign of racemization, where an amino acid has inverted its stereochemistry from the L- to the D-form.[3] This is particularly common for certain amino acids like cysteine and histidine.[2] Our Racemization guide offers detailed protocols to minimize this side reaction.

Q5: How can I prevent aspartimide formation in my Asp-containing peptide?

Aspartimide formation is a common side reaction, especially in sequences containing Asp-Gly, Asp-Ala, or Asp-Ser.[2] Minimization strategies include using specific protecting groups for Asp, adding HOBt to the piperidine solution during deprotection, and employing specialized cleavage protocols.[2] Our dedicated Aspartimide Formation guide provides a comprehensive overview of these methods.

Troubleshooting Guides

© 2026 BenchChem. All rights reserved.

These in-depth guides provide detailed mechanistic explanations, preventative strategies, and step-by-step protocols to address specific byproduct formation challenges.

Racemization

The Problem: Racemization is the loss of chiral integrity at the α-carbon of an amino acid, leading to the formation of diastereomeric impurities that can be difficult to separate and may have altered biological activity.[3]

The Causality: The mechanism of racemization typically involves the abstraction of the α-proton of the activated amino acid.[3] This can proceed through direct enolization or the formation of a 5(4H)-oxazolone (azlactone) intermediate, which readily tautomerizes to a resonance-stabilized and achiral form.[3] Factors that influence racemization include the type of amino acid, the activation method, the base used, and the reaction temperature.[4] Histidine and cysteine are particularly susceptible to racemization.[2]

Preventative Strategies & Protocols:

- Choice of Coupling Reagent: The use of carbodiimides in conjunction with racemization-suppressing additives is highly recommended.[5]

Coupling Additive	Key Advantages
1-Hydroxybenzotriazole (HOBt)	Suppresses racemization and accelerates coupling.[2][5]
1-Hydroxy-7-azabenzotriazole (HOAt)	More effective than HOBt in suppressing racemization, especially in challenging couplings.[5]
6-Cl-HOBt	A more acidic additive that can further reduce racemization.[2]

- Protocol for Minimizing Racemization during Coupling:
  - Dissolve the Fmoc-amino acid (1.0 eq) and the racemization-suppressing additive (e.g., HOBt, 1.0 eq) in DMF.

© 2026 BenchChem. All rights reserved.

- Add the coupling reagent (e.g., DIC, 1.0 eq) to the solution and allow for pre-activation for 2-5 minutes.
- Add the pre-activated amino acid solution to the deprotected peptide-resin.
- Allow the coupling reaction to proceed at room temperature. For particularly sensitive amino acids, consider performing the coupling at a lower temperature (e.g., 0 °C).

- Base Selection: The choice of base during coupling can significantly impact the extent of racemization. Use weaker, non-nucleophilic bases when possible.

Base	Recommendation
N,N-Diisopropylethylamine (DIPEA)	Commonly used, but can promote racemization. Use with caution and in minimal necessary amounts.
N-Methylmorpholine (NMM)	A weaker base than DIPEA, often a better choice to minimize racemization.
sym-Collidine	Recommended for cases with a high risk of racemization due to its steric hindrance and lower basicity.[3]

- Protecting Group Strategy for Sensitive Residues: For amino acids prone to racemization like histidine, using a protecting group on the side chain can be beneficial. For instance, protecting the π-imidazole nitrogen of histidine with a methoxybenzyl group significantly reduces racemization.[2]

Troubleshooting Workflow for Racemization:

© 2026 BenchChem. All rights reserved.

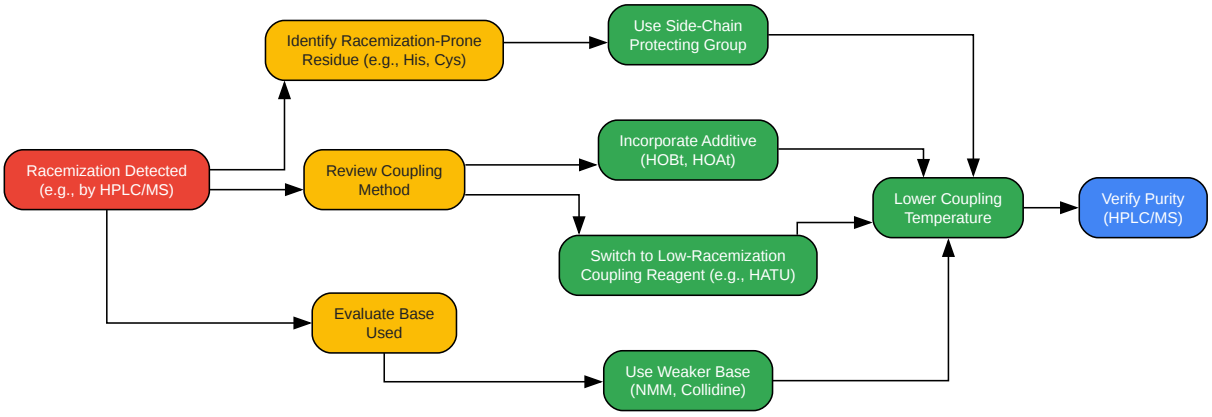

Click to download full resolution via product page

Caption: Troubleshooting workflow for addressing racemization.

Aspartimide Formation

The Problem: Aspartimide formation is an intramolecular cyclization reaction involving the side chain of an aspartic acid residue, leading to a succinimide ring. This intermediate can then reopen to form a mixture of the desired α-aspartyl peptide and the undesired β-aspartyl peptide, or it can react with piperidine to form a piperidide adduct.[2] This side reaction is particularly prevalent in sequences containing Asp-Gly, Asp-Ala, or Asp-Ser.[2]

The Causality: The reaction is initiated by the deprotonation of the backbone amide nitrogen following the Asp residue. This deprotonation is facilitated by the piperidine used for Fmoc removal. The resulting anion then attacks the side-chain ester of the aspartic acid, forming the five-membered aspartimide ring.

Preventative Strategies & Protocols:

- Protecting Group Modification: The use of protecting groups that sterically hinder the cyclization reaction is an effective strategy.

© 2026 BenchChem. All rights reserved.

Protecting Group	Mechanism of Protection
O-tert-butyl (OtBu)	Standard protection, but susceptible to aspartimide formation.
3-methyl-pent-3-yl (Mpe)	Bulky protecting group that provides steric hindrance.
2,4-dimethyl-pent-3-yl (Dmpe)	Even bulkier than Mpe, offering enhanced protection.

- Modification of Deprotection Conditions:
  - Addition of HOBt: Adding HOBt to the piperidine deprotection solution can reduce aspartimide formation.[2] A common protocol is to use 20% piperidine with 0.1 M HOBt in DMF.
  - Use of DBU: For slow or incomplete deprotections that might exacerbate aspartimide formation, switching to a solution containing 1,8-diazabicyclo[5.4.0]undec-7-ene (DBU) can be beneficial.[2]
- Specialized Cleavage Protocol: A modified cleavage protocol can also help minimize aspartimide formation.[2] This often involves lower temperatures and shorter cleavage times.

Reaction Pathway for Aspartimide Formation:

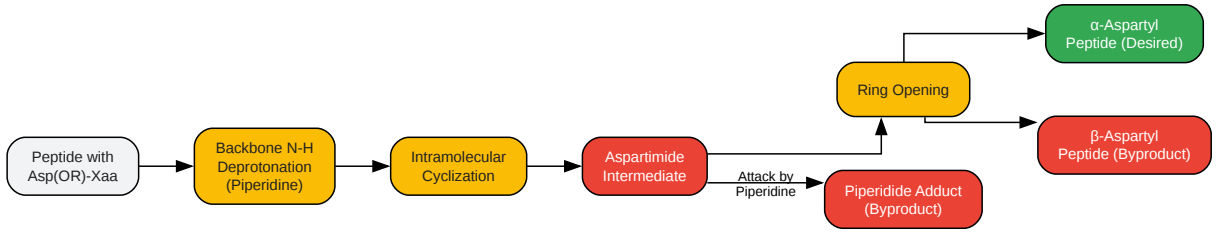

Click to download full resolution via product page

Caption: Mechanism of aspartimide formation and subsequent reactions.

© 2026 BenchChem. All rights reserved.

Aggregation

The Problem: Aggregation of the growing peptide chain on the solid support can lead to incomplete coupling and deprotection reactions, resulting in deletion sequences and low yields.[2] This is caused by the formation of intermolecular hydrogen bonds, leading to secondary structures like β-sheets. Hydrophobic sequences are particularly prone to aggregation.[2]

The Causality: As the peptide chain elongates, it can fold back on itself and interact with neighboring chains, forming a stable, aggregated structure that is less accessible to reagents. This is often observed as a shrinking or clumping of the resin beads.[6]

Preventative Strategies & Protocols:

- Resin Choice:
  - Low-Substitution Resins: Using a resin with a lower loading capacity can increase the distance between peptide chains, reducing the likelihood of aggregation.
  - PEGylated Resins: Resins like NovaPEG, PEGA, and NovaSyn® TG have good swelling properties in a variety of solvents and can help to solvate the growing peptide chain, disrupting aggregation.
- Solvent and Temperature Optimization:
  - Solvent Choice: Switching to more polar, hydrogen-bond-disrupting solvents like N-methylpyrrolidone (NMP) or adding dimethyl sulfoxide (DMSO) can help to break up aggregates.[2]
  - Elevated Temperature: Performing couplings at a higher temperature can provide the energy needed to disrupt the hydrogen bonds causing aggregation.[2] Microwave irradiation is a particularly effective method for this.
- Disruptive Additives and Backbone Modifications:
  - Chaotropic Salts: Adding chaotropic salts like LiCl or KSCN to the reaction mixture can disrupt the secondary structure of the peptide.[2]

© 2026 BenchChem. All rights reserved.

- Pseudoprolines: Incorporating pseudoproline dipeptides at specific positions in the peptide sequence can introduce a "kink" in the backbone, effectively disrupting the formation of β-sheets.[2]

Protocol for Overcoming Aggregation:

- If aggregation is suspected (e.g., poor swelling of the resin), pause the synthesis.
- Wash the resin extensively with a solvent known to disrupt aggregation, such as NMP or a mixture containing DMSO.
- Consider performing the next coupling at an elevated temperature (e.g., 50-75°C), potentially with microwave assistance.
- If the problem persists, resynthesize the peptide using a lower-loaded resin or incorporate pseudoproline dipeptides at strategic locations.

Deletion and Insertion Sequences

The Problem: Deletion sequences are peptides that are missing one or more amino acids from the target sequence. Insertion sequences, while less common, are peptides that contain an extra amino acid. Both represent significant impurities that can be challenging to remove.

The Causality:

- Deletion Sequences: These are primarily caused by incomplete coupling reactions, where a portion of the N-terminally deprotected peptide chains fail to react with the incoming activated amino acid.[1] In the subsequent cycle, these unreacted chains will couple with the next amino acid, resulting in a deletion. Incomplete deprotection can also lead to deletions.
- Insertion Sequences: These can occur if the Fmoc protecting group is prematurely cleaved from the incoming amino acid, allowing it to be activated and coupled twice. Couplings with preformed symmetrical anhydrides in DMF have been shown to lead to insertion peptides.[7]

Preventative Strategies & Protocols:

- Ensuring Complete Coupling:

© 2026 BenchChem. All rights reserved.

- Monitoring the Reaction: Use a qualitative test like the ninhydrin (Kaiser) test to confirm the absence of free primary amines after coupling.
- Double Coupling: For difficult couplings, performing the reaction twice can help to drive it to completion.
- Capping: After the coupling step, any unreacted free amines can be permanently blocked by acetylation using a reagent like acetic anhydride.[1] This prevents them from reacting in subsequent cycles and makes the resulting capped, truncated peptide easier to separate during purification.

- Protocol for Capping:
  - After the coupling reaction and subsequent washes, add a capping solution (e.g., 5% acetic anhydride, 6% 2,6-lutidine in DMF) to the resin.
  - Allow the capping reaction to proceed for 5-10 minutes.
  - Wash the resin thoroughly with DMF to remove excess capping reagents.
- Optimizing Deprotection:
  - Ensure that the deprotection solution (e.g., 20% piperidine in DMF) is fresh and that the deprotection time is sufficient for complete Fmoc removal.
  - For sterically hindered residues, a longer deprotection time or a stronger deprotection reagent may be necessary.

Decision Tree for Minimizing Deletion Sequences:

© 2026 BenchChem. All rights reserved.

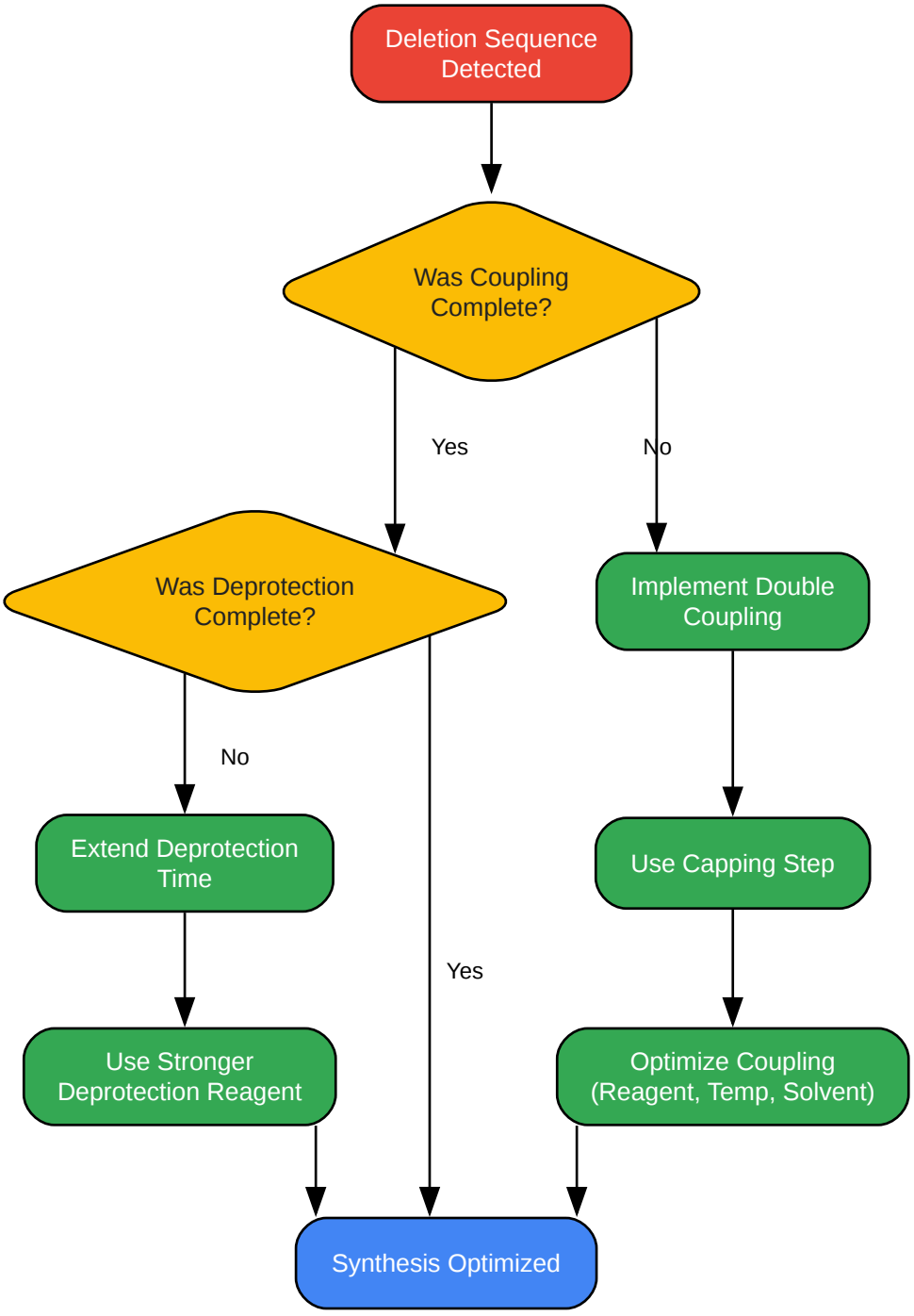

Click to download full resolution via product page

Caption: Decision tree for troubleshooting deletion sequences.

References

- CEM Corporation. (2025). SPPS Reagents Explained: A Complete Guide. YouTube. [Link]

© 2026 BenchChem. All rights reserved.

- AAPPTEC. (n.d.). Aggregation, Racemization and Side Reactions in Peptide Synthesis. [Link]
- PubMed. (n.d.). Side reactions in solid-phase peptide synthesis and their applications. [Link]
- ACS Publications. (2015). Synthesis of Side-Chain Modified Polypeptides. Chemical Reviews. [Link]
- ResearchGate. (2018). (PDF) Side reactions in peptide synthesis: An overview. [Link]
- Gyros Protein Technologies. (n.d.). Solid-phase Peptide Synthesis (SPPS) in Research & Development. [Link]
- AAPPTec. (n.d.). Peptide Modifications; Cyclization; Stapled peptides; phosphorylation;. [Link]
- Aapptec Peptides. (n.d.). SYNTHESIS NOTES. [Link]
- NIH. (n.d.). Chemical Wastes in the Peptide Synthesis Process and Ways to Reduce Them. PMC. [Link]
- Bibliomed. (n.d.). Side reactions in peptide synthesis: An overview. [Link]
- MDPI. (2023). Effects of Side Chain and Peptide Bond Modifications on the Targeting Properties of Stabilized Minigastrin Analogs. [Link]
- ResearchGate. (n.d.). Side-Chain Modification of Peptides Using a Phosphoranylidene Amino Acid | Request PDF. [Link]
- Gyros Protein Technologies. (n.d.). Webinar: SPPS Tips: Strategies for Minimizing Side-Reactions. [Link]
- PubMed. (n.d.). Mass spectrometric evaluation of synthetic peptides for deletions and insertions. [Link]
- NIH. (n.d.). Introduction to Peptide Synthesis. PMC. [Link]
- CSBio. (2023). A PRACTICAL GUIDE TO SOLID PHASE PEPTIDE SYNTHESIS. [Link]

© 2026 BenchChem. All rights reserved.

- MDPI. (n.d.). Epimerisation in Peptide Synthesis. [Link]
- Nowick Laboratory. (2020). Standard practices for Fmoc-based solid-phase peptide synthesis in the Nowick laboratory (Version 1.7.2). [Link]

Need Custom Synthesis?

BenchChem offers custom synthesis for rare earth carbides and specific isotopiclabeling.

Email: info@benchchem.com or Request Quote Online.

Sources

- 1. gyrosproteintechnologies.com [gyrosproteintechnologies.com]
- 2. peptide.com [peptide.com]
- 3. bachem.com [bachem.com]
- 4. A Brief Introduction to the Racemization of Amino Acids in Polypeptide Synthesis [en.highfine.com]
- 5. Introduction to Peptide Synthesis - PMC [pmc.ncbi.nlm.nih.gov]
- 6. bachem.com [bachem.com]
- 7. Mass spectrometric evaluation of synthetic peptides for deletions and insertions - PubMed [pubmed.ncbi.nlm.nih.gov]
- To cite this document: BenchChem. [Technical Support Center: Minimizing Byproduct Formation in Peptide Synthesis]. BenchChem, [2026]. [Online PDF]. Available at: [https://www.benchchem.com/product/b1426014/docs#technical-support-center-minimizing-byproduct-formation-in-peptide-synthesis]

Disclaimer & Data Validity:

The information provided in this document is for Research Use Only (RUO) and is strictly not intended for diagnostic or therapeutic procedures. While BenchChem strives to provide accurate protocols, we make no warranties, express or implied, regarding the fitness of this product for every specific experimental setup.

© 2026 BenchChem. All rights reserved.

Technical Support: The protocols provided are for reference purposes. Unsure if this reagent suits your experiment?

Need Industrial/Bulk Grade? Request Custom Synthesis Quote

BenchChem

Our mission is to be the trusted global source of essential and advanced chemicals, empowering scientists and researchers to drive progress in science and industry.

Contact

Address: 3281 E Guasti Rd

Ontario, CA 91761, United States

Phone: (601) 213-4426

Email: info@benchchem.com

Contact our Ph.D. Support Team for a compatibility check

© 2026 BenchChem. All rights reserved.