Technical Support Center: Interpreting NMR Spectra of Complex Fluoroalkanes

Author: BenchChem Technical Support Team. **Date**: May 2026

Compound of Interest

Compound Name:	*1,2-Dibromo-1-(perfluoro-n-hexyl)ethane*
CAS No.:	*51249-62-8*
Cat. No.:	*B1425101*

Get Quote

Welcome to the technical support center for Nuclear Magnetic Resonance (NMR) spectroscopy of complex fluoroalkanes. This resource is designed for researchers, scientists, and drug development professionals who encounter the unique challenges presented by fluorinated molecules in their analytical work. As a Senior Application Scientist, my goal is to provide you with not just procedural guidance, but also the underlying scientific principles to empower your experimental design and interpretation.

The ^{19}F nucleus is a powerful probe in NMR due to its 100% natural abundance, high gyromagnetic ratio, and exquisite sensitivity to its electronic environment.[1][2] These properties, however, also give rise to complexities in spectral analysis, particularly in molecules with multiple fluorine atoms or complex stereochemistry. This guide is structured to address the most common and challenging issues in a practical question-and-answer format.

Part 1: Frequently Asked Questions (FAQs)

Q1: Why is the chemical shift range in ^{19}F NMR so much larger than in ^{1}H NMR, and what are the implications?

© 2026 BenchChem. All rights reserved.

A1: The vast chemical shift range of ^{19}F NMR, spanning approximately 800 ppm, is a direct consequence of the electronic environment around the fluorine nucleus.[1] Unlike protons, fluorine has nine electrons, and variations in shielding from these electrons, influenced by the local molecular structure, lead to a much greater spread of resonance frequencies.[3] Electron-donating groups increase shielding, causing upfield shifts (more negative ppm values), while electron-withdrawing groups decrease shielding, resulting in downfield shifts (more positive ppm values).[4]

Causality and Implications:

- Enhanced Resolution: This wide dispersion is advantageous for resolving signals from structurally similar but distinct fluorine environments, which might overlap in ^{1}H NMR.
- Acquisition Challenges: However, this broad range can also pose experimental challenges. It may necessitate a wider spectral width during acquisition, which can lead to lower digital resolution if the number of data points is not sufficiently increased.[1] It can also make simultaneous excitation of all ^{19}F signals difficult with standard pulses.

Q2: My integrals in ^{19}F NMR seem inaccurate. What are the common causes and how can I improve quantification?

A2: Accurate integration in ^{19}F NMR is crucial for determining the relative number of fluorine atoms, but several factors can compromise its reliability.

Common Causes of Inaccurate Integration:

- Wide Spectral Width: The large chemical shift range can lead to baseline distortions and difficulty in phasing the entire spectrum, both of which significantly affect integration accuracy.[1]
- Short Relaxation Delays (d1): Fluorine nuclei can have long longitudinal relaxation times (T_1). If the relaxation delay between scans is too short, signals from nuclei with longer T_1 values will not fully relax, leading to attenuated signal intensity and underestimated integrals.

© 2026 BenchChem. All rights reserved.

- Nuclear Overhauser Effect (NOE): During proton decoupling, NOEs can occur between ^{1}H and ^{19}F nuclei, altering the populations of spin states and leading to non-quantitative signal intensities.[3]

Protocol for Improved Quantification:

- Optimize Spectral Width and Resolution: Ensure the spectral width is just large enough to encompass all signals of interest. Increase the number of data points (TD) to maintain good digital resolution.
- Determine T_1 Values: If accurate quantification is critical, perform a T_1 inversion-recovery experiment to measure the relaxation times of the ^{19}F signals.
- Set Appropriate Relaxation Delay: Set the relaxation delay (d1) to at least 5 times the longest T_1 value in your sample to ensure full relaxation.[5]
- Use Inverse-Gated Decoupling: To suppress NOE effects while still benefiting from proton decoupling, use an inverse-gated decoupling pulse sequence. In this experiment, the decoupler is on only during the acquisition time and off during the relaxation delay.[5]

Q3: I'm observing very complex splitting patterns in my ^{19}F spectrum. How do I begin to interpret these?

A3: The complexity arises from both homonuclear (^{19}F-^{19}F) and heteronuclear (e.g., ^{19}F-^{1}H, ^{19}F-^{13}C) couplings. A key difference from proton NMR is that large coupling constants are often observed over multiple bonds (long-range couplings).[1]

Systematic Interpretation Workflow:

- Identify ^{1}H Couplings: Acquire a $^{19}F\{^{1}H\}$ decoupled spectrum. The remaining couplings will be due to other fluorine atoms or other heteronuclei (like ^{31}P). Comparing this to the coupled spectrum will reveal the couplings to protons.
- Analyze Homonuclear Couplings: ^{19}F-^{19}F coupling constants are typically much larger than ^{19}F-^{1}H couplings.[1] Geminal (^{2}JFF) couplings can be as large as 250-300 Hz.[1]

© 2026 BenchChem. All rights reserved.

- Utilize 2D NMR: For complex molecules, 1D spectra are often insufficient. Two-dimensional NMR experiments are invaluable for deconvoluting these complex coupling networks.
  - ^{1}H-^{19}F HETCOR (Heteronuclear Correlation): This experiment correlates ^{1}H and ^{19}F nuclei that are coupled to each other, helping to identify which protons are near which fluorine atoms.
  - ^{19}F-^{19}F COSY (Correlation Spectroscopy): This reveals which fluorine atoms are coupled to each other.
  - ^{19}F-^{13}C HMBC (Heteronuclear Multiple Bond Correlation): This experiment identifies long-range couplings between ^{19}F and ^{13}C, which is crucial for piecing together the carbon skeleton.[1]

Part 2: Troubleshooting Guides

Issue 1: Poor Signal-to-Noise or Broad Lineshapes

Symptoms: Your ^{19}F signals are weak, broad, or both, making interpretation difficult.

Possible Causes & Solutions:

© 2026 BenchChem. All rights reserved.

Cause	Explanation	Troubleshooting Steps
Poor Shimming	An inhomogeneous magnetic field across the sample volume is a common cause of broad lines.	1. Ensure proper sample positioning in the coil. 2. Perform automated shimming on the ^{19}F channel if available. If not, shim on the lock signal, but be aware that the optimal shims may differ slightly.
Chemical Exchange	The molecule may be undergoing conformational changes or chemical exchange on the NMR timescale, leading to line broadening.[3]	1. Acquire spectra at different temperatures. Lowering the temperature may slow the exchange process and sharpen the signals (if you enter the slow-exchange regime).
Paramagnetic Impurities	Trace amounts of paramagnetic metals can cause significant line broadening.	1. Ensure high-purity solvents and glassware. 2. Consider passing the sample through a small plug of Chelex resin to remove metal contaminants.
Unresolved Couplings	A multitude of small, unresolved couplings can manifest as a broad signal.	1. Acquire a proton-decoupled spectrum to see if the lines sharpen. 2. Consider acquiring a ^{13}C-decoupled spectrum if couplings to carbon are suspected.[6]

Issue 2: Extraneous or Unexpected Peaks in the Spectrum

Symptoms: You observe small peaks that do not seem to correspond to your target molecule or expected impurities.

Possible Causes & Solutions:

© 2026 BenchChem. All rights reserved.

Cause	Explanation	Troubleshooting Steps
^{13}C Satellites	Coupling between ^{19}F and the naturally abundant ^{13}C isotope (1.1%) can give rise to small satellite peaks symmetrically flanking the main ^{19}F signal. The spacing of these satellites corresponds to the ^{1}JFC coupling constant.[7]	1. Confirm that the peaks are of ~0.55% intensity of the main peak. 2. The distance between the satellite and the main peak (in Hz) is the ^{1}JFC coupling constant. 3. These are a normal feature and confirm the F-C bond.
Spinning Sidebands	If the sample is being spun, imperfections in the magnetic field can cause sidebands to appear at frequencies equal to the spinning rate on either side of a large peak.	1. Acquire the spectrum without spinning. If the peaks disappear, they were spinning sidebands.[7] 2. Alternatively, change the spinning rate; the position of the sidebands will change accordingly.
Impurity from Reference Compound	If an internal reference is used, it may contain fluorinated impurities.	1. Run a spectrum of the reference compound alone to check for purity.
Background Signal from Probe	Some NMR probes contain fluorinated materials (e.g., Teflon) that can give rise to broad background signals, especially with long acquisition times.	1. Acquire a spectrum of the NMR solvent alone. If the signal is present, it is likely from the probe. These signals are often very broad and can sometimes be subtracted out during processing.

Issue 3: Difficulty in Assigning Resonances in a Complex Fluoroalkane

Symptoms: You have a clean spectrum with multiple ^{19}F signals, but you are unable to definitively assign them to specific positions in your molecule.

Advanced Methodologies for Structural Assignment:

© 2026 BenchChem. All rights reserved.

- Computational NMR Prediction:
  - Why it works: Quantum mechanical calculations (DFT) can predict ^{19}F chemical shifts with increasing accuracy.[8][9] This is particularly useful for distinguishing between isomers.
  - Protocol:
    1. Generate low-energy conformers of your proposed structures using a molecular mechanics force field.
    2. Perform geometry optimization and NMR chemical shift calculations using a suitable DFT functional and basis set (e.g., B3LYP/6-31G(d,p)).
    3. Compare the calculated chemical shifts to your experimental data. The structure with the best correlation is the most likely candidate.
- Selective 1D NOE Experiments:
  - Why it works: The Nuclear Overhauser Effect (NOE) arises from through-space dipolar interactions. Observing an NOE between a ^{19}F nucleus and a specific ^{1}H nucleus can provide definitive proof of their spatial proximity, aiding in stereochemical assignments.[3]
  - Protocol:
    1. Acquire a standard ^{1}H spectrum and assign the proton resonances.
    2. Run a 1D $^{19}F\{^{1}H\}$ NOE experiment (e.g., DPFGSE-NOE).
    3. Selectively irradiate a well-resolved proton signal and observe which ^{19}F signals show an enhancement.
- Advanced 2D NMR Techniques:
  - Why it works: A combination of 2D experiments can build a complete picture of the molecule's connectivity.[10][11]
  - Experimental Workflow Diagram:

© 2026 BenchChem. All rights reserved.

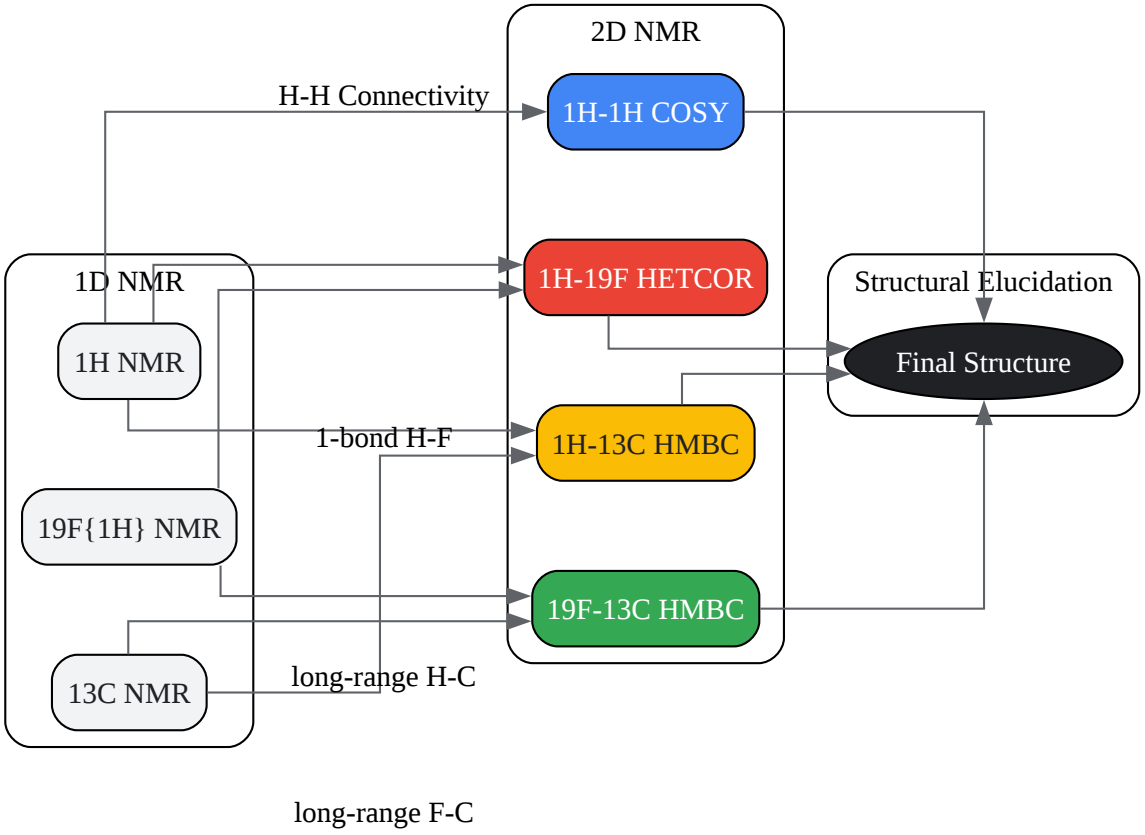

Click to download full resolution via product page

Caption: Workflow for 2D NMR-based structure elucidation of fluoroalkanes.

Part 3: Data Reference Tables

Table 1: Typical ^{19}F Chemical Shift Ranges for Common Fluoroalkane Moieties

Referenced to $CFCl_3$ at 0 ppm. Note that shifts can be highly sensitive to substitution and solvent.[12][13]

© 2026 BenchChem. All rights reserved.

Functional Group	Chemical Shift Range (ppm)
-CF_3	-50 to -70
-CF_2- (aliphatic)	-90 to -140
-CHF- (aliphatic)	-140 to -220
-CH_2F	-200 to -220
Ar-F (Fluorobenzene)	-100 to -120
Ar-CF_3	-60 to -65
F-C=O (Acyl Fluorides)	+20 to -70

Table 2: Representative ^{19}F Coupling Constants (J)

These values are approximate and can vary significantly with geometry and substitution.[1]

© 2026 BenchChem. All rights reserved.

Coupling Type	Number of Bonds	Typical Range (Hz)	Notes
^{2}JHF (geminal)	2	40 - 80	Highly dependent on geometry.
^{3}JHF (vicinal)	3	0 - 30	Follows a Karplus-type relationship with dihedral angle.
^{2}JFF (geminal)	2	150 - 350	Very large and structurally informative.
^{3}JFF (vicinal)	3	0 - 20	Can be through-space or through-bond.
^{4}JFF (long-range)	4	0 - 30	Often larger than ^{3}JFF, especially in rigid or unsaturated systems.
^{1}JCF	1	160 - 350	Directly bonded carbon-fluorine coupling.
^{2}JCF	2	15 - 40	Geminal carbon-fluorine coupling.

This technical guide provides a starting point for navigating the complexities of fluoroalkane NMR. The key to successful interpretation lies in a systematic approach, combining 1D and 2D techniques, and leveraging computational methods when necessary. Remember that every spectrum is a puzzle, and these tools are designed to help you piece it together.

References

- Wikipedia. Fluorine-19 nuclear magnetic resonance spectroscopy. [Link]
- Chaykovskaya, M. et al. (2022). ^{19}F-centred NMR analysis of mono-fluorinated compounds. PubMed Central. [Link]
- Slideshare. Nmr spectroscopy of fluorine 19. [Link]

© 2026 BenchChem. All rights reserved.

- Dalvit, C. et al. (2022). Practical Considerations and Guidelines for Spectral Referencing for Fluorine NMR Ligand Screening. ACS Omega. [Link]
- The Journal of Organic Chemistry. 19F NMR Chemical Shifts. 1. Aliphatic Fluorides. [Link]
- Royal Society of Chemistry. New 19F NMR methodology reveals structures of molecules in complex mixtures of fluorinated compounds. [Link]
- National Institutes of Health. Predicting 19F NMR Chemical Shifts: A Combined Computational and Experimental Study of a Trypanosomal Oxidoreductase–Inhibitor Complex. [Link]
- Gerig, J.T. Fluorine NMR. Encyclopedia of Magnetic Resonance. [Link]
- Weizmann Institute of Science. 19Flourine NMR. [Link]
- National Institutes of Health. New Frontiers and Developing Applications in 19F NMR. [Link]
- National Institutes of Health. New 19F NMR methodology reveals structures of molecules in complex mixtures of fluorinated compounds. [Link]
- ResearchGate. 13 questions with answers in FLUORINE-19 NMR. [Link]
- NMR Wiki. Extraneous Peaks Observed on 19F NMR of Isolated "Pure" Compound. [Link]
- University of California, Santa Barbara. 19F Chemical Shifts and Coupling Constants. [Link]
- Royal Society of Chemistry. A computational tool to accurately and quickly predict 19F NMR chemical shifts of molecules with fluorine–carbon and fluorine–boron bonds. [Link]
- SciSpace. A beginner's guide to 19F NMR and its role in drug screening. [Link]
- University of Ottawa NMR Facility Blog. PSYCHE to Evaluate 1H-19F Coupling Constants. [Link]
- YouTube. 2D NMR spectroscopy for structural elucidation of complex small molecules. [Link]

© 2026 BenchChem. All rights reserved.

Need Custom Synthesis?

BenchChem offers custom synthesis for rare earth carbides and specific isotopiclabeling.

Email: info@benchchem.com or Request Quote Online.

Sources

- 1. Fluorine-19 nuclear magnetic resonance spectroscopy - Wikipedia [en.wikipedia.org]
- 2. 19F-centred NMR analysis of mono-fluorinated compounds - PMC [pmc.ncbi.nlm.nih.gov]
- 3. biophysics.org [biophysics.org]
- 4. alfa-chemistry.com [alfa-chemistry.com]
- 5. 19Flourine NMR [chem.ch.huji.ac.il]
- 6. jeolusa.com [jeolusa.com]
- 7. Extraneous Peaks Observed on 19F NMR of Isolated "Pure" Compound - NMR Wiki Q&A Forum [qa.nmrwiki.org]
- 8. Predicting 19F NMR Chemical Shifts: A Combined Computational and Experimental Study of a Trypanosomal Oxidoreductase–Inhibitor Complex - PMC [pmc.ncbi.nlm.nih.gov]
- 9. A computational tool to accurately and quickly predict 19F NMR chemical shifts of molecules with fluorine–carbon and fluorine–boron bonds - Physical Chemistry Chemical Physics (RSC Publishing) [pubs.rsc.org]
- 10. New 19F NMR methodology reveals structures of molecules in complex mixtures of fluorinated compounds - PMC [pmc.ncbi.nlm.nih.gov]
- 11. youtube.com [youtube.com]
- 12. Nmr spectroscopy of fluorine 19 | PPTX [slideshare.net]
- 13. 19F [nmr.chem.ucsb.edu]

- To cite this document: BenchChem. [Technical Support Center: Interpreting NMR Spectra of Complex Fluoroalkanes]. BenchChem, [2026]. [Online PDF]. Available at: [https://www.benchchem.com/product/b1425101/docs#technical-support-center-interpreting-nmr-spectra-of-complex-fluoroalkanes]

Disclaimer & Data Validity:

The information provided in this document is for Research Use Only (RUO) and is strictly not intended for diagnostic or therapeutic procedures. While BenchChem strives to provide accurate protocols, we make no warranties, express or implied, regarding the fitness of this product for every specific experimental setup.

Technical Support: The protocols provided are for reference purposes. Unsure if this reagent suits your experiment?

Need Industrial/Bulk Grade? Request Custom Synthesis Quote

BenchChem

Our mission is to be the trusted global source of essential and advanced chemicals, empowering scientists and researchers to drive progress in science and industry.

Contact

Address: 3281 E Guasti Rd

Ontario, CA 91761, United States

Phone: (601) 213-4426

Email: info@benchchem.com

Contact our Ph.D. Support Team for a compatibility check

© 2026 BenchChem. All rights reserved.