Publish Comparison Guide: GC-MS Fragmentation Patterns of 3-(Chloromethyl)-4-methyltetrahydrofuran

Author: BenchChem Technical Support Team. **Date**: May 2026

Compound of Interest

Compound Name:	*3-(Chloromethyl)-4-methyltetrahydrofuran*
CAS No.:	*1202400-53-0*
Cat. No.:	*B1423742*

Get Quote

Executive Summary

This guide provides an in-depth technical analysis of the gas chromatography-mass spectrometry (GC-MS) fragmentation behavior of **3-(Chloromethyl)-4-methyltetrahydrofuran**. [1][2] It is designed for analytical chemists and process development scientists who need to distinguish this specific regioisomer from its structural analogs during synthesis monitoring or impurity profiling.

The guide contrasts the target compound with its most prevalent regioisomer (2-(chloromethyl)-4-methyltetrahydrofuran) and its non-chlorinated analog (3,4-dimethyltetrahydrofuran).[1][2] The core differentiator identified is the intensity of the

-cleavage product, which varies drastically based on the position of the chloromethyl group relative to the ether oxygen.

Structural Context & Ionization Physics

© 2026 BenchChem. All rights reserved.

To interpret the mass spectrum accurately, one must understand the molecular geometry influencing the fragmentation.

- Target Molecule: **3-(Chloromethyl)-4-methyltetrahydrofuran**[1][2]
- Molecular Formula: C

  H

  ClO[2]
- Molecular Weight: 134.60 g/mol (monoisotopic mass ~134.05 for

  Cl)[2]

The "Oxygen Trigger" (Expertise & Experience)

In electron ionization (EI, 70 eV), the radical cation is initially formed by the removal of a non-bonding electron from the ether oxygen. This generates a localized positive charge and a radical site on the oxygen atom. The subsequent fragmentation is driven by

-cleavage, where the bond adjacent to the oxygen atom breaks to stabilize the radical.[3][4][5]

- In 2-substituted isomers: The substituent is directly on the

  -carbon. Cleavage here ejects the substituent immediately.
- In 3-substituted isomers (Target): The substituent is on the

  -carbon.

  -cleavage opens the ring but does not immediately eject the substituent. This results in a fundamentally different spectral fingerprint.[2]

Fragmentation Pathways: Target vs. Alternative[2]

The following comparison highlights the mechanistic differences between the target (3-substituted) and its critical isomer (2-substituted).

Comparative Data Table

© 2026 BenchChem. All rights reserved.

Feature	Target: 3-(Chloromethyl)-4-methylTHF	Alternative: 2-(Chloromethyl)-4-methylTHF	Mechanistic Cause
Molecular Ion ( )	m/z 134 / 136 (Weak to Moderate)	m/z 134 / 136 (Very Weak)	-cleavage is faster in the 2-isomer, depleting the .[1][2]
Isotope Pattern	3:1 ratio (Cl : Cl)	3:1 ratio (Cl : Cl)	Presence of one Chlorine atom.[2][6]
Base Peak	m/z 41, 55, or 98 (Hydrocarbon/HCl loss)	m/z 85 ( )	2-isomer ejects directly via -cleavage.[1][2]
Loss of Side Chain	m/z 85 (Weak/Absent)	m/z 85 (Dominant/Base Peak)	In 3-isomer, is to oxygen; direct loss is unfavorable.[2]
HCl Elimination	m/z 98 (Distinctive)	m/z 98 (Present but obscured)	Loss of HCl ( ) is a major pathway for the 3-isomer.[2]

Pathway Visualization

The following diagram illustrates why the 2-isomer loses the chloromethyl group easily, while the 3-isomer (Target) favors ring opening and HCl loss.

© 2026 BenchChem. All rights reserved.

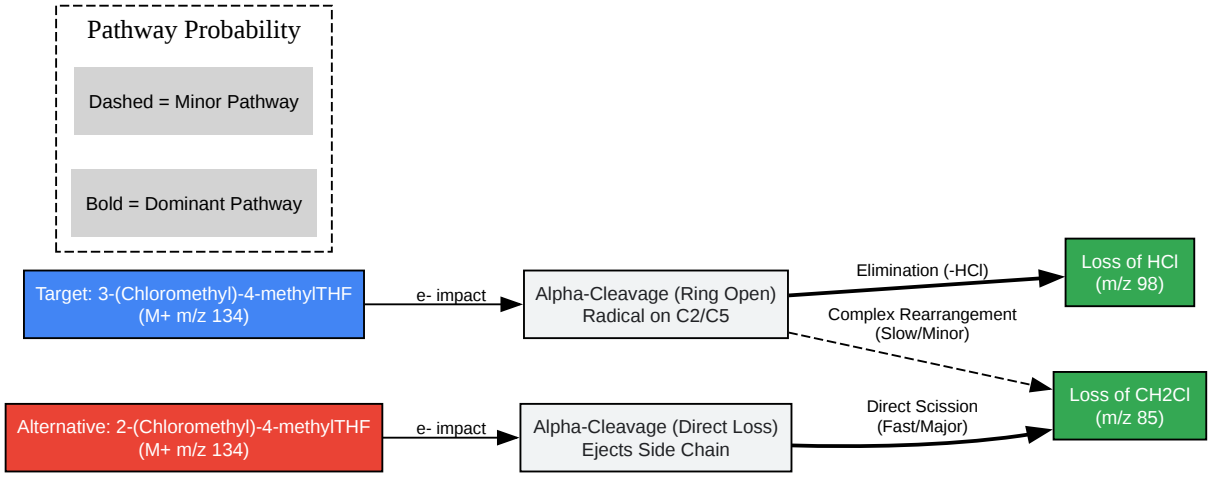

Click to download full resolution via product page

Caption: Mechanistic divergence between 3-substituted (Target) and 2-substituted (Alternative) isomers. The 2-isomer favors direct side-chain ejection.[1][2]

Detailed Experimental Protocol (Self-Validating)

To replicate these findings and validate the identity of your compound, follow this standardized GC-MS workflow. This protocol includes a System Suitability Test (SST) using a non-chlorinated analog to verify column performance.[2]

A. Sample Preparation[2][7]

- Solvent: Dissolve 1 mg of the sample in 1 mL of Dichloromethane (DCM) or Ethyl Acetate. Avoid methanol to prevent potential solvolysis of the alkyl chloride over time.
- Concentration: ~1000 ppm (split injection) or 10 ppm (splitless).
- Vial: Amber glass to prevent photodegradation.

© 2026 BenchChem. All rights reserved.

B. Instrumental Parameters (Agilent/Thermo Standard Configuration)

- Inlet: Split/Splitless, 250°C.
- Injection: 1 µL, Split ratio 50:1.
- Column: DB-5ms or equivalent (30m x 0.25mm x 0.25µm).[2] Why? Low bleed and standard polarity for ether separation.
- Carrier Gas: Helium at 1.0 mL/min (Constant Flow).[2]
- Oven Program:
  - Hold 40°C for 2 min (Solvent delay).
  - Ramp 10°C/min to 150°C (Elutes target ethers).
  - Ramp 30°C/min to 280°C (Bake out).
- MS Source: EI mode, 70 eV, 230°C.
- Scan Range: m/z 35 – 300.[2]

C. Validation Steps (Trustworthiness)[2]

- Retention Time Check: The 3-substituted isomer generally elutes after the 2-substituted isomer on non-polar columns (DB-5) due to slightly higher boiling points associated with more compact symmetry, though this must be confirmed with standards.
- Isotope Ratio Check: Examine the molecular ion cluster (m/z 134/136).[2]
  - Calculate Ratio:

    .
  - Acceptance Criteria: The ratio must be 32% ± 5%. If >40% or <20%, suspect co-eluting impurities or incorrect identification (e.g., dichloro species or non-chlorinated interference). [2]

© 2026 BenchChem. All rights reserved.

Diagnostic Interpretation Guide

When analyzing your spectrum, look for these specific "Fingerprint" signals.[2]

The "HCl Loss" Cluster (m/z 98)

- Observation: A distinct peak at m/z 98 (C

  H

  O

).[2]
- Mechanism: The molecular ion (m/z 134) eliminates a molecule of HCl (36 Da).
- Significance: This confirms the presence of the chlorine atom and an available beta-hydrogen. It is more prominent in the 3-isomer than the 2-isomer because the 2-isomer prefers losing the whole CH

  Cl group.

The "Ring Fragments" (m/z 41, 42, 55)

- Observation: High intensity peaks in the low mass region.
- Mechanism: Shattering of the tetrahydrofuran ring after opening.
  - m/z 42: C

    H

    (Propene radical cation equivalent).[2]
  - m/z 55: C

    H

    (Butenyl cation).[2]

© 2026 BenchChem. All rights reserved.

- Significance: These are generic THF markers. If these are present without the m/z 134/136 pair, your molecule may have degraded (lost HCl) in the injector port. Lower the inlet temperature to 200°C if M+ is invisible.

Absence of Dominant m/z 85[1]

- Observation: The peak at m/z 85 is weak or less than 50% of the base peak.
- Comparison: If m/z 85 is the base peak (100% intensity), you likely have the 2-(chloromethyl) isomer, not the 3-isomer.

References

- NIST Mass Spectrometry Data Center.Tetrahydrofuran and 3-Methyltetrahydrofuran Fragmentation Data.[2] National Institute of Standards and Technology.[7][8] Available at: [Link][2]
- McLafferty, F. W., & Tureček, F. (1993). Interpretation of Mass Spectra (4th ed.).[2] University Science Books. (Standard text for alpha-cleavage mechanisms).
- Silverstein, R. M., Webster, F. X., & Kiemle, D. J. (2005).[2] Spectrometric Identification of Organic Compounds. John Wiley & Sons.[2] (Reference for isotope abundance calculations).
- PubChem Compound Summary.3-(Chloromethyl)tetrahydrofuran (Related Isomer Data). National Library of Medicine.[2] Available at: [Link][2]

Need Custom Synthesis?

BenchChem offers custom synthesis for rare earth carbides and specific isotopiclabeling.

Email: info@benchchem.com or Request Quote Online.

Sources

- 1. chemistry.stackexchange.com [chemistry.stackexchange.com]
- 2. CAS 3003-84-7: 2-(Chloromethyl)tetrahydrofuran [cymitquimica.com]
- 3. Alpha (α) Cleavage - Chemistry Steps [chemistrysteps.com]

- 4. Alpha cleavage - Wikipedia [en.wikipedia.org]
- 5. youtube.com [youtube.com]
- 6. scholar.ulethbridge.ca [scholar.ulethbridge.ca]
- 7. 3-Chloro-tetrahydrofuran [webbook.nist.gov]
- 8. Tetrahydrofuran [webbook.nist.gov]
- To cite this document: BenchChem. [Publish Comparison Guide: GC-MS Fragmentation Patterns of 3-(Chloromethyl)-4-methyltetrahydrofuran]. BenchChem, [2026]. [Online PDF]. Available at: [https://www.benchchem.com/product/b1423742/docs#publish-comparison-guide-gc-ms-fragmentation-patterns-of-3-chloromethyl-4-methyltetrahydrofuran]

Disclaimer & Data Validity:

The information provided in this document is for Research Use Only (RUO) and is strictly not intended for diagnostic or therapeutic procedures. While BenchChem strives to provide accurate protocols, we make no warranties, express or implied, regarding the fitness of this product for every specific experimental setup.

Technical Support: The protocols provided are for reference purposes. Unsure if this reagent suits your experiment?

Need Industrial/Bulk Grade? Request Custom Synthesis Quote

BenchChem

Our mission is to be the trusted global source of essential and advanced chemicals, empowering scientists and researchers to drive progress in science and industry.

Contact

Address: 3281 E Guasti Rd

Ontario, CA 91761, United States

Phone: (601) 213-4426

Email: info@benchchem.com

© 2026 BenchChem. All rights reserved.

Contact our Ph.D. Support Team for a compatibility check

© 2026 BenchChem. All rights reserved.