The Mechanism of Action of Philanthotoxin-74: An In-depth Technical Guide

Author: BenchChem Technical Support Team. **Date**: April 2026

Compound of Interest

Compound Name:	*Philanthotoxin 74*
CAS No.:	*401601-12-5*
Cat. No.:	*B1420781*

Get Quote

For Researchers, Scientists, and Drug Development Professionals

Abstract

Philanthotoxin-74 (PhTX-74) is a synthetic analog of philanthotoxin-433, a polyamine amide toxin isolated from the venom of the wasp Philanthus triangulum. It is a potent, non-competitive, and use-dependent antagonist of ionotropic glutamate receptors (iGluRs), with a notable selectivity for α-amino-3-hydroxy-5-methyl-4-isoxazolepropionic acid (AMPA) and kainate receptors. This technical guide provides a comprehensive overview of the mechanism of action of PhTX-74, detailing its molecular interactions, quantitative pharmacological data, and the experimental protocols used to elucidate its function. This document is intended to serve as a valuable resource for researchers in the fields of neuroscience, pharmacology, and drug development.

Introduction

Ionotropic glutamate receptors are fundamental to excitatory synaptic transmission in the central nervous system. Their dysfunction is implicated in a range of neurological and psychiatric disorders. Philanthotoxins represent a valuable class of pharmacological tools for

© 2026 BenchChem. All rights reserved.

studying these receptors due to their unique mechanism of action as open-channel blockers. PhTX-74, a synthetic derivative, has been instrumental in dissecting the pharmacology and physiology of AMPA receptors (AMPARs) and kainate receptors (KARs).

Mechanism of Action

The primary mechanism of action of PhTX-74 is the blockade of the ion channel pore of susceptible iGluRs. This action is both non-competitive, meaning it does not compete with the binding of the endogenous agonist glutamate, and use-dependent (or activity-dependent), signifying that the receptor channel must be open for the toxin to gain access to its binding site within the pore.

The structure of PhTX-74, comprising a hydrophobic aromatic head group and a long, flexible hydrophilic polyamine tail, is crucial to its function. The positively charged polyamine tail is drawn into the open channel pore by the negative membrane potential, where it interacts with negatively charged or polar amino acid residues lining the channel. The larger aromatic head group then effectively plugs the external vestibule of the channel, preventing ion flux.

PhTX-74 exhibits selectivity for AMPA and kainate receptors, particularly those that are calcium-permeable. Calcium permeability in AMPARs is largely determined by the presence of the GluA2 subunit. Receptors lacking the edited (Q/R site) GluA2 subunit are calcium-permeable and show high sensitivity to blockade by polyamine toxins like PhTX-74.

Quantitative Pharmacological Data

The inhibitory potency of PhTX-74 has been quantified on various recombinant AMPA receptor subunit combinations, primarily through electrophysiological measurements in Xenopus oocytes. The half-maximal inhibitory concentration (IC50) is a key parameter used to describe its potency.

© 2026 BenchChem. All rights reserved.

Receptor Subunit Composition	IC50 (nM)	Reference
Homomeric GluA1	296	[1]
Homomeric GluA3	263	[1]
Heteromeric GluA1/GluA2	22,000	[1]
Heteromeric GluA2/GluA3	22,000	[1]

Note: The presence of the transmembrane AMPA receptor regulatory protein (TARP) γ-2 can influence the potency of PhTX-74. The data presented here were obtained in the presence of γ-2.

Experimental Protocols

Two-Electrode Voltage Clamp (TEVC) in Xenopus laevis Oocytes

This technique is fundamental for characterizing the effect of PhTX-74 on iGluRs expressed in a heterologous system.

4.1.1. Oocyte Preparation

- Harvest stage V-VI oocytes from anesthetized female Xenopus laevis.
- Treat the oocytes with collagenase (e.g., 2 mg/mL in calcium-free OR-2 solution) for 1-2 hours to defolliculate.
- Manually select healthy oocytes and store them in Barth's solution supplemented with antibiotics.

4.1.2. cRNA Injection

- Linearize plasmids containing the cDNA for the desired AMPAR subunits (e.g., GluA1, GluA2).
- Synthesize capped cRNA using an in vitro transcription kit (e.g., mMESSAGE mMACHINE).

© 2026 BenchChem. All rights reserved.

- Inject approximately 50 nL of cRNA (10-50 ng) into each oocyte.
- Incubate the injected oocytes at 16-18°C for 2-5 days to allow for receptor expression.

4.1.3. Electrophysiological Recording

- Place an oocyte in a recording chamber continuously perfused with standard frog Ringer's solution.
- Impale the oocyte with two glass microelectrodes (0.5-2 MΩ resistance) filled with 3 M KCl. One electrode measures the membrane potential, and the other injects current.
- Clamp the oocyte membrane potential at a holding potential of -60 mV to -80 mV.
- Apply the agonist (e.g., 100 µM glutamate) to elicit an inward current.
- Once a stable baseline current is achieved, co-apply the agonist with varying concentrations of PhTX-74.
- Measure the peak inward current in the presence of PhTX-74 and normalize it to the control current to determine the percentage of inhibition.
- Construct a concentration-response curve and fit the data with a logistical equation to determine the IC50 value.

Radioligand Binding Assay (Competitive Binding)

This assay can be used to determine the binding affinity of PhTX-74 to the polyamine binding site within the ion channel.

4.2.1. Membrane Preparation

- Homogenize brain tissue (e.g., rat cortex) or cells expressing the target receptor in ice-cold buffer (e.g., 50 mM Tris-HCl, pH 7.4).
- Centrifuge the homogenate at 1,000 x g for 10 minutes to remove nuclei and cellular debris.
- Centrifuge the supernatant at 40,000 x g for 30 minutes to pellet the membranes.

© 2026 BenchChem. All rights reserved.

- Wash the membrane pellet by resuspension and centrifugation.
- Resuspend the final pellet in assay buffer and determine the protein concentration.

4.2.2. Binding Assay

- In a 96-well plate, add the membrane preparation, a fixed concentration of a radiolabeled polyamine site ligand (e.g., [3H]-spermine), and varying concentrations of unlabeled PhTX-74.
- Incubate the mixture at room temperature for a defined period (e.g., 60 minutes) to reach equilibrium.
- Terminate the binding reaction by rapid filtration through glass fiber filters (e.g., Whatman GF/B) using a cell harvester.
- Wash the filters rapidly with ice-cold wash buffer to remove unbound radioligand.
- Measure the radioactivity retained on the filters using liquid scintillation counting.
- Determine the concentration of PhTX-74 that inhibits 50% of the specific binding of the radioligand (IC50).
- Calculate the inhibitory constant (Ki) using the Cheng-Prusoff equation.

Visualizations

Signaling Pathway Diagram

© 2026 BenchChem. All rights reserved.

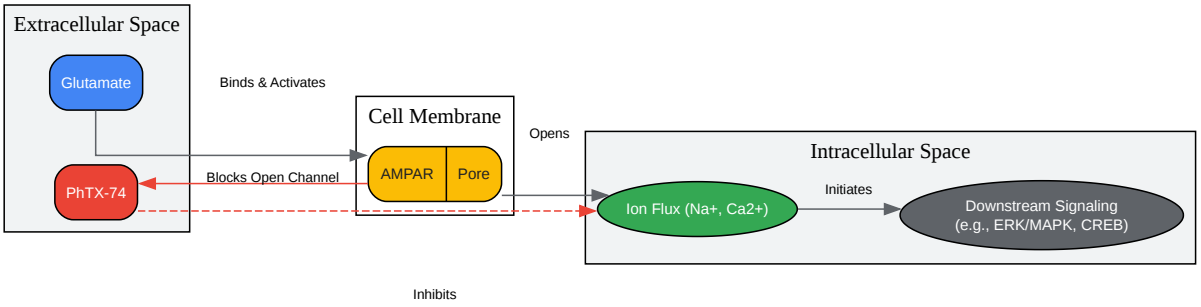

Click to download full resolution via product page

Caption: Mechanism of action of Philanthotoxin-74 on an AMPA receptor.

Experimental Workflow Diagram

© 2026 BenchChem. All rights reserved.

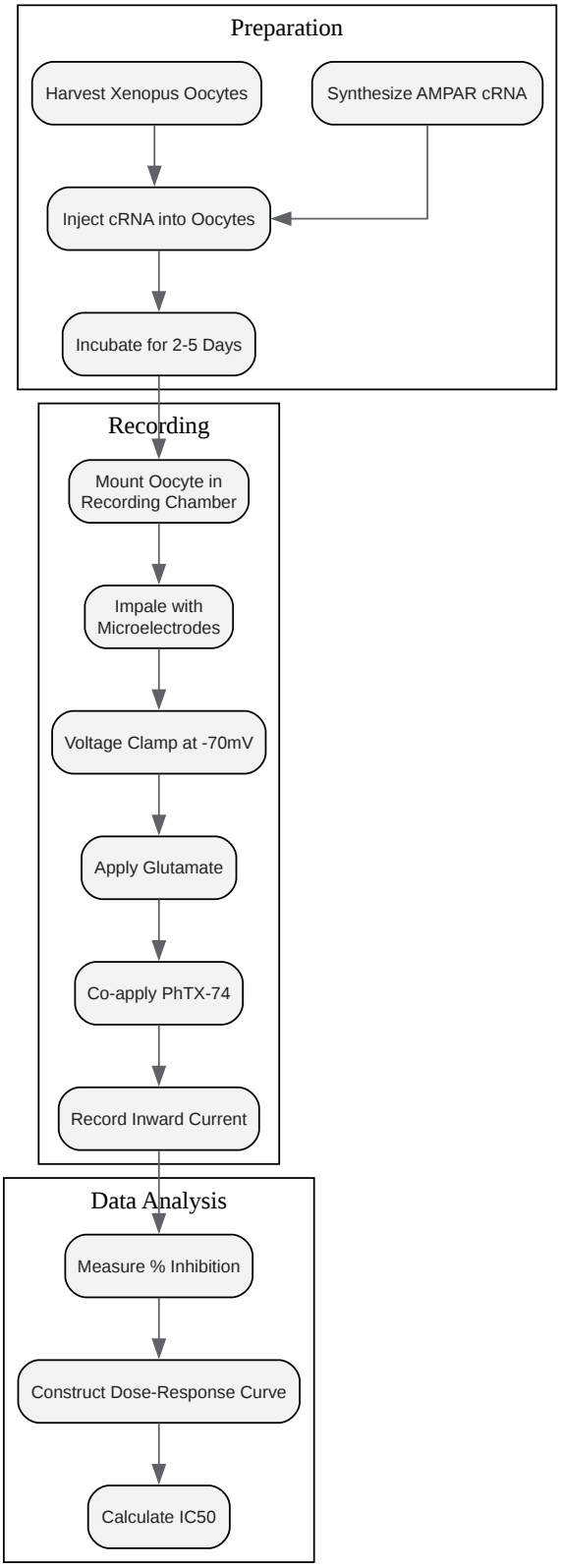

Click to download full resolution via product page

Caption: Workflow for Two-Electrode Voltage Clamp (TEVC) experiment.

© 2026 BenchChem. All rights reserved.

Downstream Signaling Consequences

By blocking calcium-permeable AMPA receptors, PhTX-74 can significantly impact intracellular signaling cascades that are dependent on calcium influx. These include:

- ERK/MAPK Pathway: Calcium influx through AMPARs can activate the Ras-Raf-MEK-ERK signaling pathway, which is involved in cell proliferation, differentiation, and survival. Inhibition of this influx by PhTX-74 would be expected to attenuate the activation of this pathway.

- CREB Phosphorylation: Calcium can activate various kinases, such as CaMKII, which in turn can phosphorylate the transcription factor CREB (cAMP response element-binding protein). Phosphorylated CREB is crucial for the expression of genes involved in synaptic plasticity and neuronal survival. PhTX-74, by reducing calcium entry, can lead to decreased CREB phosphorylation.

Conclusion

Philanthotoxin-74 is a powerful and selective tool for the study of ionotropic glutamate receptors. Its mechanism as a non-competitive, use-dependent open-channel blocker, particularly of calcium-permeable AMPA and kainate receptors, allows for the detailed investigation of their physiological and pathological roles. The experimental protocols outlined in this guide provide a framework for researchers to further explore the intricate pharmacology of this and related compounds, ultimately contributing to the development of novel therapeutics for neurological disorders.

Need Custom Synthesis?

BenchChem offers custom synthesis for rare earth carbides and specific isotopiclabeling.

Email: info@benchchem.com or Request Quote Online.

References

- 1. Evaluation of PhTX-74 as subtype-selective inhibitor of GluA2-containing AMPA receptors - PubMed [pubmed.ncbi.nlm.nih.gov]

- To cite this document: BenchChem. [The Mechanism of Action of Philanthotoxin-74: An In-depth Technical Guide]. BenchChem, [2026]. [Online PDF]. Available at: [https://www.benchchem.com/product/b1420781/docs#the-mechanism-of-action-of-philanthotoxin-74-an-in-depth-technical-guide]

Disclaimer & Data Validity:

The information provided in this document is for Research Use Only (RUO) and is strictly not intended for diagnostic or therapeutic procedures. While BenchChem strives to provide accurate protocols, we make no warranties, express or implied, regarding the fitness of this product for every specific experimental setup.

Technical Support: The protocols provided are for reference purposes. Unsure if this reagent suits your experiment?

Need Industrial/Bulk Grade? Request Custom Synthesis Quote

BenchChem

Our mission is to be the trusted global source of essential and advanced chemicals, empowering scientists and researchers to drive progress in science and industry.

Contact

Address: 3281 E Guasti Rd

Ontario, CA 91761, United States

Phone: (601) 213-4426

Email: info@benchchem.com

Contact our Ph.D. Support Team for a compatibility check