Preventing contamination in trace-level Hydroxetamine analysis

Author: BenchChem Technical Support Team. **Date**: April 2026

Compound of Interest

Compound Name:	*Hydroxetamine*
CAS No.:	*1620054-73-0*
Cat. No.:	*B14080820*

Get Quote

Technical Support Center: Trace-Level Hydroxetamine Analysis

This technical support center provides troubleshooting guides and frequently asked questions (FAQs) to assist researchers, scientists, and drug development professionals in preventing contamination during trace-level **hydroxetamine** analysis.

Frequently Asked Questions (FAQs)

Q1: What is **hydroxetamine** and why is its trace-level analysis important?

A1: **Hydroxetamine** (HXE), also known as O-desmethylmethoxetamine, is the primary active metabolite of the designer drug methoxetamine (MXE), a dissociative anesthetic of the arylcyclohexylamine class. Trace-level analysis of **hydroxetamine** in biological matrices such as plasma, urine, and hair is crucial for pharmacokinetic studies, toxicological assessments, and forensic investigations. Due to its longer half-life compared to its parent compound, **hydroxetamine** is a key analyte for monitoring exposure and understanding the pharmacological effects of methoxetamine.

© 2026 BenchChem. All rights reserved.

Q2: What are the most common sources of contamination in trace-level **hydroxetamine** analysis?

A2: Contamination can arise from various sources throughout the analytical workflow. Key sources include:

- Laboratory Environment: Dust, aerosols, and volatile organic compounds in the laboratory air can settle into samples.
- Analyst: Skin cells, hair, and clothing fibers from laboratory personnel can introduce contaminants. Cosmetics and personal care products are also potential sources.
- Reagents and Solvents: Impurities in solvents, acids, and water used for sample preparation and mobile phases can introduce interfering peaks.
- Labware and Equipment: Plasticizers leaching from pipette tips, vials, and collection tubes are common contaminants. Inadequately cleaned glassware and residues from previous analyses on instrument components (e.g., injector, tubing) can also lead to carryover contamination.

Q3: How can I prevent contamination from the laboratory environment and personnel?

A3: To minimize environmental and personnel-related contamination, it is essential to adhere to good laboratory practices (GLP). This includes:

- Working in a clean, well-ventilated area, preferably in a laminar flow hood or a dedicated cleanroom for trace analysis.
- Wearing appropriate personal protective equipment (PPE), such as powder-free nitrile gloves, lab coats, and hairnets.
- Regularly cleaning and disinfecting work surfaces with appropriate solvents like ethanol or isopropanol.
- Avoiding the use of personal care products that may contain interfering compounds.

Q4: What are the best practices for selecting and preparing reagents and solvents?

© 2026 BenchChem. All rights reserved.

A4: For trace-level analysis, it is imperative to use high-purity reagents and solvents.

- Use HPLC-grade or LC-MS-grade solvents and ultra-pure water (18.2 MΩ·cm).
- Filter all mobile phases and solvents through a 0.22 µm filter before use to remove particulate matter.
- Prepare fresh buffers and mobile phases regularly to prevent microbial growth and degradation.
- Run solvent blanks to check for any background contamination from your reagents.

Troubleshooting Guides

Issue 1: Unexpected Peaks or High Background in Chromatograms

© 2026 BenchChem. All rights reserved.

Possible Cause	Troubleshooting Steps	Preventive Measures
Contaminated Solvents or Reagents	1. Run a blank gradient with fresh, high-purity solvents to isolate the source of contamination. 2. If the peaks persist, prepare fresh mobile phases using solvents from a new bottle. 3. Individually infuse each mobile phase component directly into the mass spectrometer to identify the contaminated source.	1. Always use LC-MS grade solvents and ultra-pure water. 2. Filter all solvents and mobile phases before use. 3. Store solvents in clean, dedicated glass bottles.
Leaching from Plasticware	1. Switch to polypropylene or glass autosampler vials and pipette tips. 2. Run an extraction blank using the same plasticware to confirm leaching.	1. Use certified low-bleed or pre-cleaned plasticware. 2. Whenever possible, use glass or polypropylene labware for sample preparation and storage.
Carryover from Previous Injections	1. Inject a series of solvent blanks after a high-concentration sample to check for carryover. 2. If carryover is observed, perform a thorough wash of the injector, needle, and sample loop with a strong solvent mixture (e.g., isopropanol/acetonitrile/water).	1. Implement a rigorous needle and injection port washing protocol between samples. 2. Optimize the wash solvent composition to effectively remove hydroxetamine residues.
Environmental Contamination	1. Prepare a "bench blank" by leaving a sample vial open on the lab bench for a period, then analyze it for contaminants.	1. Maintain a clean and organized workspace. 2. Prepare samples in a clean environment, such as a laminar flow hood.

Issue 2: Poor Peak Shape (Tailing, Fronting, or Splitting)

© 2026 BenchChem. All rights reserved.

Possible Cause	Troubleshooting Steps	Preventive Measures
Column Contamination or Degradation	1. Reverse-flush the column with a strong solvent to remove strongly retained contaminants. 2. If peak shape does not improve, replace the column with a new one. 3. Check for column voids by inspecting the inlet.	1. Use a guard column to protect the analytical column from particulate matter and strongly retained compounds. 2. Ensure mobile phase pH is within the stable range for the column.
Inappropriate Injection Solvent	1. Ensure the injection solvent is of similar or weaker elution strength than the initial mobile phase. 2. Reconstitute the final extract in the initial mobile phase.	1. Whenever possible, dissolve and inject the sample in the initial mobile phase.
Secondary Interactions with Silanols	1. Adjust the mobile phase pH to suppress the ionization of silanol groups (e.g., lower pH for basic analytes). 2. Increase the buffer concentration in the mobile phase.	1. Use an end-capped column or a column with a different stationary phase chemistry.

Issue 3: Ion Suppression or Enhancement in the Mass Spectrometer

© 2026 BenchChem. All rights reserved.

Possible Cause	Troubleshooting Steps	Preventive Measures
Matrix Effects	1. Perform a post-column infusion experiment to identify regions of ion suppression in the chromatogram. 2. Dilute the sample to reduce the concentration of interfering matrix components. 3. Improve the sample cleanup procedure to remove more matrix components.	1. Use a more effective sample preparation technique (e.g., switch from protein precipitation to SPE). 2. Optimize the chromatographic separation to resolve hydroxetamine from co-eluting matrix components. 3. Use a stable isotope-labeled internal standard to compensate for matrix effects.[1]
Co-eluting Contaminants	1. Analyze a blank sample to identify any co-eluting peaks that may be causing ion suppression. 2. Modify the chromatographic gradient to separate the analyte from the interfering peak.	1. Ensure a thorough cleaning of the LC system to remove any residual contaminants.

Experimental Protocols

Protocol 1: Liquid-Liquid Extraction (LLE) of Hydroxetamine from Plasma

- Sample Preparation: To 500 µL of plasma, add an appropriate internal standard.
- Basification: Add 100 µL of 1M sodium hydroxide to basify the sample.
- Extraction: Add 2 mL of an organic solvent (e.g., ethyl acetate or a mixture of hexane and isoamyl alcohol) and vortex for 5 minutes.
- Centrifugation: Centrifuge the sample at 4000 rpm for 10 minutes to separate the aqueous and organic layers.

© 2026 BenchChem. All rights reserved.

- Evaporation: Transfer the organic layer to a clean tube and evaporate to dryness under a gentle stream of nitrogen at 40°C.
- Reconstitution: Reconstitute the dried residue in 100 µL of the initial mobile phase.

Protocol 2: Solid-Phase Extraction (SPE) of Hydroxetamine from Urine

- Sample Pre-treatment: To 1 mL of urine, add an internal standard and 500 µL of a suitable buffer (e.g., phosphate buffer, pH 6) to adjust the pH.
- Column Conditioning: Condition a mixed-mode or polymeric SPE cartridge with 1 mL of methanol followed by 1 mL of water.
- Sample Loading: Load the pre-treated sample onto the SPE cartridge at a slow flow rate (e.g., 1 mL/min).
- Washing: Wash the cartridge with 1 mL of water to remove polar interferences, followed by 1 mL of a weak organic solvent (e.g., 5% methanol in water) to remove less polar interferences.
- Elution: Elute the **hydroxetamine** with 1 mL of an appropriate elution solvent (e.g., methanol with 2% formic acid).
- Evaporation and Reconstitution: Evaporate the eluate to dryness and reconstitute in 100 µL of the initial mobile phase.

Quantitative Data Summary

The following tables summarize typical performance data for trace-level **hydroxetamine** analysis. Note that these values can vary depending on the specific method, instrumentation, and matrix.

Table 1: Comparison of Sample Preparation Methods for **Hydroxetamine** Analysis

© 2026 BenchChem. All rights reserved.

Parameter	Protein Precipitation (PPT)	Liquid-Liquid Extraction (LLE)	Solid-Phase Extraction (SPE)
Extraction Recovery	70-85%	85-95%	> 90%
Matrix Effect	High	Moderate	Low
Sample Throughput	High	Moderate	Low to Moderate
Cost per Sample	Low	Low	High

Table 2: Typical LC-MS/MS Validation Parameters for **Hydroxetamine** Analysis

Parameter	Typical Value
Lower Limit of Quantification (LLOQ)	0.1 - 1 ng/mL
Limit of Detection (LOD)	0.05 - 0.5 ng/mL
Linearity (r^2)	> 0.99
Intra-day Precision (%CV)	< 15%
Inter-day Precision (%CV)	< 15%
Accuracy (%Bias)	± 15%

Visualizations

© 2026 BenchChem. All rights reserved.

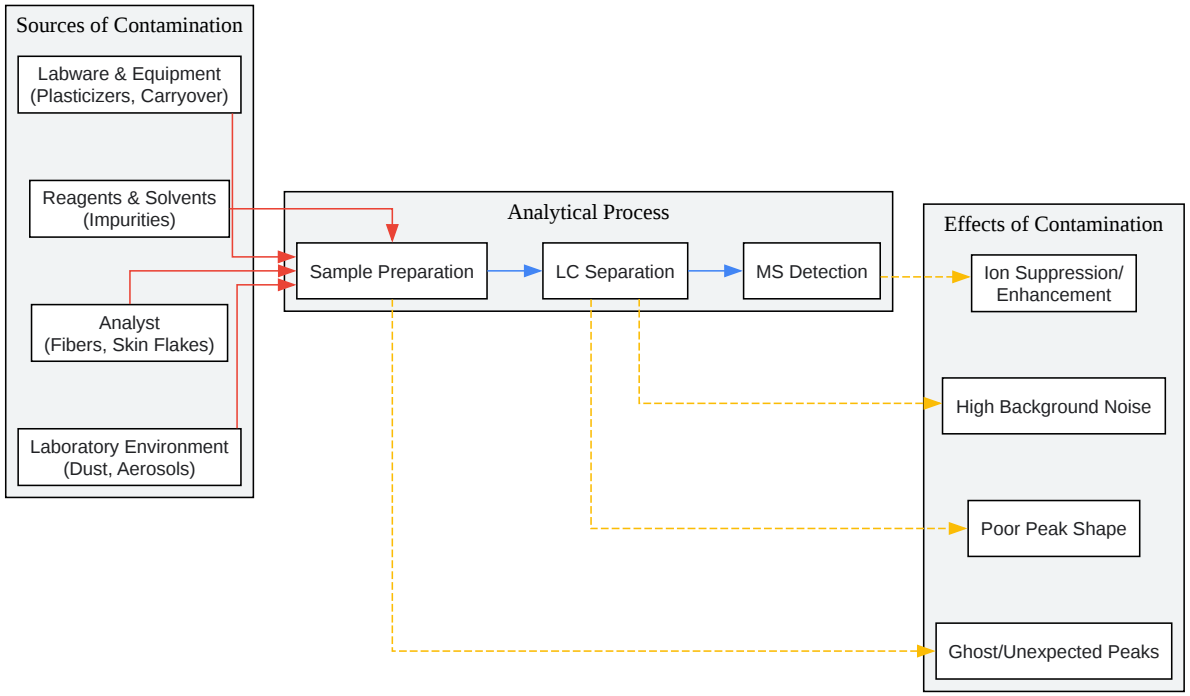

Click to download full resolution via product page

Caption: Workflow of contamination sources and their effects in trace-level analysis.

© 2026 BenchChem. All rights reserved.

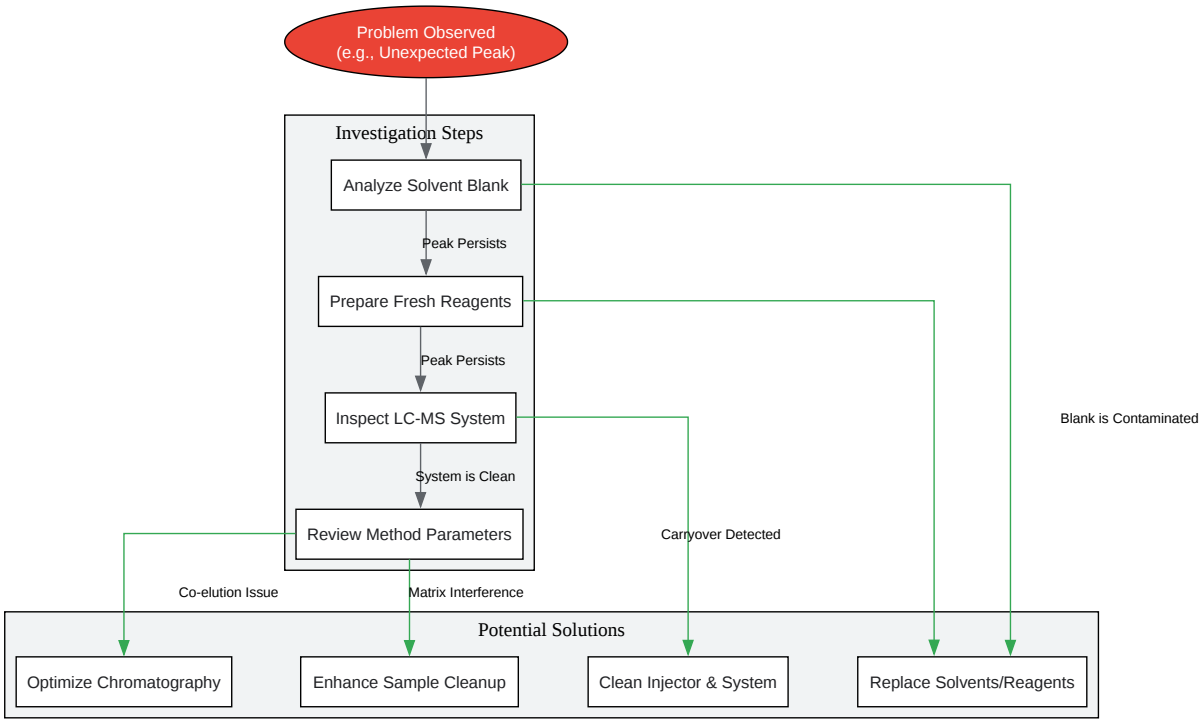

Click to download full resolution via product page

Caption: A logical troubleshooting workflow for contamination issues.

© 2026 BenchChem. All rights reserved.

Need Custom Synthesis?

BenchChem offers custom synthesis for rare earth carbides and specific isotopiclabeling.

Email: info@benchchem.com or Request Quote Online.

References

- 1. chem.libretexts.org [chem.libretexts.org]
- To cite this document: BenchChem. [Preventing contamination in trace-level Hydroxetamine analysis]. BenchChem, [2026]. [Online PDF]. Available at: [https://www.benchchem.com/product/b14080820/docs#preventing-contamination-in-trace-level-hydroxetamine-analysis]

Disclaimer & Data Validity:

The information provided in this document is for Research Use Only (RUO) and is strictly not intended for diagnostic or therapeutic procedures. While BenchChem strives to provide accurate protocols, we make no warranties, express or implied, regarding the fitness of this product for every specific experimental setup.

Technical Support: The protocols provided are for reference purposes. Unsure if this reagent suits your experiment?

Need Industrial/Bulk Grade? Request Custom Synthesis Quote

BenchChem

Our mission is to be the trusted global source of essential and advanced chemicals, empowering scientists and researchers to drive progress in science and industry.

Contact

Address: 3281 E Guasti Rd

Ontario, CA 91761, United States

Phone: (601) 213-4426

Email: info@benchchem.com

© 2026 BenchChem. All rights reserved.

Contact our Ph.D. Support Team for a compatibility check

© 2026 BenchChem. All rights reserved.