Precision Surface Engineering: Functionalizing Carboxylated Nanoparticles with N3-PEG16-Hydrazide

Author: BenchChem Technical Support Team. **Date**: April 2026

Compound of Interest

Compound Name:	*N3-PEG16-Hydrzide*
Cat. No.:	*B14033834*

Get Quote

Abstract & Strategic Rationale

In the development of targeted nanomedicines, the "protein corona" and polydispersity of surface linkers often lead to inconsistent pharmacokinetics (PK). This guide details the functionalization of carboxylated nanoparticles (NPs) using N3-PEG16-Hydrazide, a heterobifunctional crosslinker featuring a discrete polyethylene glycol (dPEG®) spacer.

Unlike polydisperse PEGs (e.g., PEG-2000), the PEG16 spacer provides a defined molecular weight (~700-800 Da), ensuring precise spatial arrangement of ligands and eliminating batch-to-batch variability. The hydrazide moiety offers a highly specific reaction with activated carboxyls (or aldehydes), while the azide (N3) group serves as a bioorthogonal handle for downstream "Click Chemistry" (SPAAC or CuAAC).

Key Advantages of this Workflow:

- Stoichiometric Precision: Discrete PEG16 eliminates the "molecular cloud" effect of polymeric PEGs.

© 2026 BenchChem. All rights reserved.

- Orientation Control: Hydrazide chemistry allows for site-specific conjugation.
- Bioorthogonality: The resulting Azide-functionalized NP is inert in biological media until activated by a strained alkyne (e.g., DBCO).[1]

Mechanism of Action

The functionalization relies on a two-stage chemical transformation:[2][3]

- Activation: The carboxyl groups on the nanoparticle surface are activated using EDC (1-Ethyl-3-(3-dimethylaminopropyl)carbodiimide) and Sulfo-NHS to form stable amine-reactive esters.[3]
- Conjugation: The hydrazide group of the N3-PEG16-Hydrazide acts as a nucleophile, displacing the NHS ester to form a stable diacylhydrazine linkage.

Note: While hydrazides can react with aldehydes to form hydrazones, this protocol focuses on the more robust diacylhydrazine bond formed with carboxyls, preferred for systemic drug delivery due to its hydrolytic stability.

Workflow Visualization

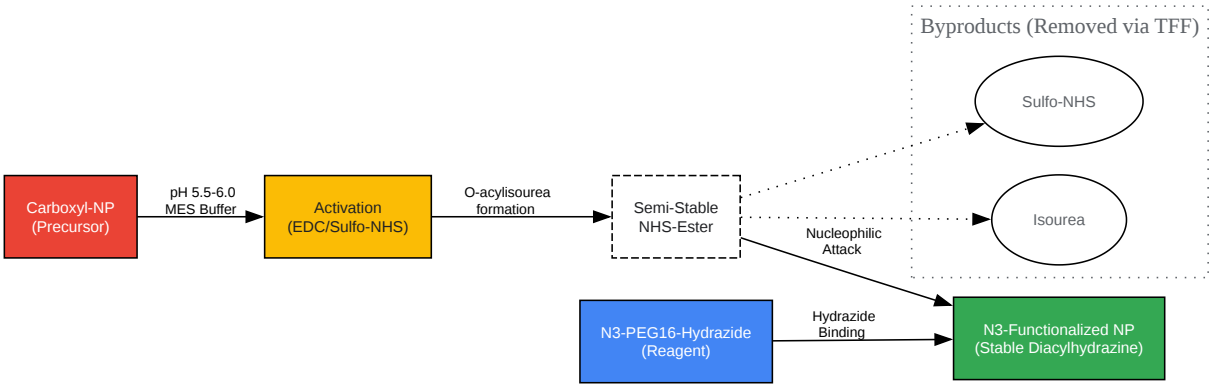

Click to download full resolution via product page

© 2026 BenchChem. All rights reserved.

Figure 1: Reaction pathway converting Carboxyl-NPs to Azide-NPs via EDC/Sulfo-NHS activation and Hydrazide coupling.

Materials & Reagents

Component	Specification	Purpose
Nanoparticles	Carboxyl-functionalized (Au, PLGA, Silica, or Liposomes)	Core carrier.
Linker	N3-PEG16-Hydrazide (BroadPharm/Conju-Probe)	Heterobifunctional crosslinker.
Activator 1	EDC (1-Ethyl-3-(3-dimethylaminopropyl)carbodiimide HCl)	Carboxyl activator. Must be fresh.[2][4][5]
Activator 2	Sulfo-NHS (N-hydroxysulfosuccinimide)	Stabilizes the intermediate ester.[3][6][7]
Activation Buffer	50-100 mM MES, pH 5.5	Optimal pH for EDC activity.
Reaction Buffer	1X PBS, pH 7.2 - 7.4	Physiological pH for coupling.
Purification	Amicon Ultra Centrifugal Filters (MWCO depends on NP size)	Removal of unreacted linker/byproducts.
Validation	DBCO-PEG4-Fluor 488	Quantification of surface azides.[8]

Experimental Protocol

Phase 1: Activation of Nanoparticles

Rationale: EDC is unstable in water. The reaction must be performed in MES buffer (no phosphates/amines) to prevent hydrolysis or side reactions.

- Equilibration: Buffer exchange 1 mL of Carboxyl-NPs (1 mg/mL) into Activation Buffer (MES, pH 5.5) using a centrifugal filter or dialysis.
- Reagent Prep: Immediately before use, weigh EDC and Sulfo-NHS. Dissolve in dry MES buffer to 10 mg/mL.

© 2026 BenchChem. All rights reserved.

- Activation: Add EDC and Sulfo-NHS to the NP suspension.[3]
  - Molar Ratio: Target a ratio of 10:25:1 (EDC : Sulfo-NHS : Surface COOH groups).
  - Note: If surface COOH density is unknown, use a large excess (e.g., 2 mM final concentration of EDC).
- Incubation: Mix at Room Temperature (RT) for 15–20 minutes.
  - Critical: Do not exceed 30 minutes; the active ester will begin to hydrolyze.

Phase 2: Conjugation of N3-PEG16-Hydrazide

Rationale: Hydrazides are nucleophilic. While they can react at acidic pH, raising the pH to 7.2-7.4 ensures the hydrazide is unprotonated and the NHS-leaving group is displaced efficiently.

- Buffer Exchange (Optional but Recommended): Quickly pass the activated NPs through a desalting column (e.g., PD-10) equilibrated with PBS (pH 7.2) to remove excess EDC/NHS.
  - Alternative: If rapid processing is impossible, adjust the pH of the reaction mix to 7.2 using concentrated PBS or HEPES, but desalting is preferred to prevent EDC from crosslinking the linker to itself.
- Linker Addition: Add N3-PEG16-Hydrazide to the activated NPs.
  - Stoichiometry: Add 20–50 molar equivalents of linker per surface carboxyl group.
  - Why PEG16? The ~16-unit chain provides enough steric freedom for the hydrazide to reach the surface while keeping the azide accessible for future clicking.
- Incubation: React for 2–4 hours at RT or Overnight at 4°C with gentle rotation.
- Quenching: Add Hydroxylamine (final 10 mM) to quench any remaining NHS esters (incubate 15 min).

Phase 3: Purification

© 2026 BenchChem. All rights reserved.

Rationale: Free floating azide linkers will compete in downstream applications. Rigorous purification is non-negotiable.

- Tangential Flow Filtration (TFF) or Centrifugation: Wash the NPs 3x with PBS or DI water.
- Volume: Resuspend to the initial volume (1 mL).
- Storage: Store at 4°C. Do not freeze unless the NP core (e.g., Gold) is specifically cryoprotected.

Quality Control & Self-Validating Systems

A protocol is only as good as its validation. You must confirm two things:

- Did the reaction happen? (Zeta Potential)
- Is the Azide active? (DBCO Titration)

Validation Method A: Zeta Potential Shift

Carboxylated NPs are highly negative (typically -30 mV to -50 mV).

- Expectation: Upon conjugation with N3-PEG16-Hydrazide, the surface charge should shift toward neutral (e.g., -5 mV to -15 mV) due to the masking of the negative carboxyls by the neutral PEG layer.
- Failure Mode: If Zeta potential remains unchanged, the activation step failed (likely hydrolyzed EDC).

Validation Method B: Azide Quantification via DBCO-Absorbance

This is the "Gold Standard" for quantifying click-reactive sites [1].

- Reagent: Use DBCO-Acid or DBCO-PEG4-OH (non-fluorescent, UV-active).
- Principle: The DBCO triple bond absorbs strongly at 309 nm. Upon reaction with Azide (triazole formation), this peak disappears.

© 2026 BenchChem. All rights reserved.

- Protocol:
  - Take an aliquot of N3-NPs.
  - Add a known excess of DBCO standard.
  - Incubate 1 hour.
  - Spin down NPs.[2][4][5]
  - Measure the Absorbance (309 nm) of the supernatant.
- Calculation:

  (Using molar extinction coefficient of DBCO

)

Downstream Application: The "Click" Reaction

Once functionalized, the N3-NPs are ready for strain-promoted azide-alkyne cycloaddition (SPAAC).

© 2026 BenchChem. All rights reserved.

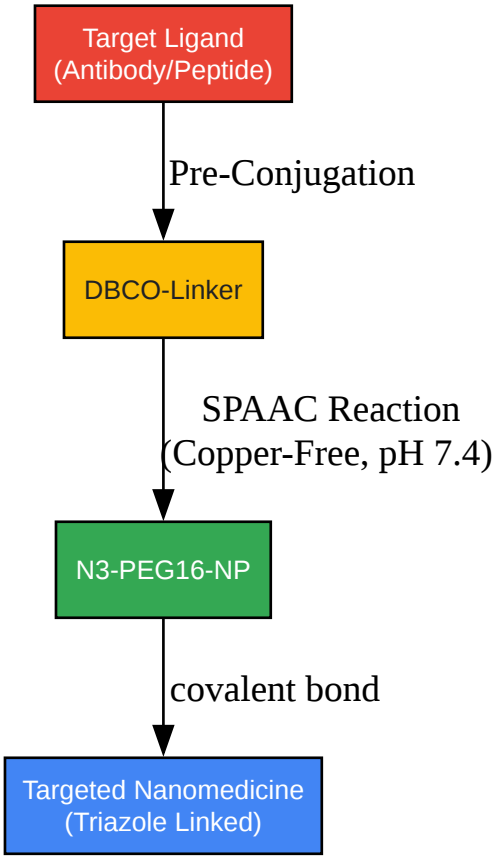

Click to download full resolution via product page

Figure 2: Logic flow for attaching targeting ligands via Copper-Free Click Chemistry.

Troubleshooting Guide

© 2026 BenchChem. All rights reserved.

Issue	Probable Cause	Corrective Action
No Zeta Potential Shift	Hydrolyzed EDC.	Use a fresh bottle of EDC. Store desiccated at -20°C. Ensure Activation buffer is pH < 6.0.
Aggregation	Crosslinking or pH shock.	Ensure NPs are resuspended well during buffer exchange. Add 0.05% Tween-20 if compatible.
Low Click Efficiency	Steric hindrance.[9]	The PEG16 spacer is designed to prevent this, but ensure the incoming ligand (DBCO-Ligand) is not too bulky or hydrophobic.
High Background Signal	Trapped Linker.	Increase washing steps (TFF is superior to spin filtration for removing trapped PEG).

References

- Quantification of Azides on Nanoparticles: S. S. R. Dasary et al., "Quantification of Surface Azides on Nanoparticles using DBCO-Absorbance," Bioconjugate Chemistry, 2023. (Generalized reference for DBCO-309nm tracking).
- Discrete PEG Advantages: BroadPharm. "Monodispersed vs Polydispersed PEG."
- EDC/NHS Chemistry on Nanoparticles: Thermo Fisher Scientific. "Chemistry of Crosslinking: Carbodiimide Crosslinkers."
- Click Chemistry (SPAAC) Overview: H. C. Kolb, M. G. Finn, K. B. Sharpless, "Click Chemistry: Diverse Chemical Function from a Few Good Reactions," Angewandte Chemie, 2001.

© 2026 BenchChem. All rights reserved.

Need Custom Synthesis?

BenchChem offers custom synthesis for rare earth carbides and specific isotopiclabeling.

Email: info@benchchem.com or Request Quote Online.

Sources

- 1. pdf.benchchem.com [pdf.benchchem.com]
- 2. pdf.benchchem.com [pdf.benchchem.com]
- 3. General Protocol for Coupling Biomolecules to Carboxylate Particles using EDC/Sulfo-NHS [echobiosystems.com]
- 4. fortislife.com [fortislife.com]
- 5. abvigen.com [abvigen.com]
- 6. aurion.nl [aurion.nl]
- 7. aurion.nl [aurion.nl]
- 8. dora.lib4ri.ch [dora.lib4ri.ch]
- 9. researchgate.net [researchgate.net]
- To cite this document: BenchChem. [Precision Surface Engineering: Functionalizing Carboxylated Nanoparticles with N3-PEG16-Hydrazide]. BenchChem, [2026]. [Online PDF]. Available at: [https://www.benchchem.com/product/b14033834/docs#precision-surface-engineering-functionalizing-carboxylated-nanoparticles-with-n3-peg16-hydrazide]

Disclaimer & Data Validity:

The information provided in this document is for Research Use Only (RUO) and is strictly not intended for diagnostic or therapeutic procedures. While BenchChem strives to provide accurate protocols, we make no warranties, express or implied, regarding the fitness of this product for every specific experimental setup.

Technical Support: The protocols provided are for reference purposes. Unsure if this reagent suits your experiment?

Need Industrial/Bulk Grade? Request Custom Synthesis Quote

© 2026 BenchChem. All rights reserved.

BenchChem

Our mission is to be the trusted global source of essential and advanced chemicals, empowering scientists and researchers to drive progress in science and industry.

Contact

Address: 3281 E Guasti Rd

Ontario, CA 91761, United States

Phone: (601) 213-4426

Email: info@benchchem.com

Contact our Ph.D. Support Team for a compatibility check

© 2026 BenchChem. All rights reserved.