Application Notes and Protocols for Cell-Based Assays of Vinblastine ADCs

Author: BenchChem Technical Support Team. **Date**: April 2026

Compound of Interest

Compound Name:	*MC-Val-Cit-PAB-vinblastine*
Cat. No.:	*B14027720*

Get Quote

For Researchers, Scientists, and Drug Development Professionals

These application notes provide a comprehensive guide to the essential cell-based assays for evaluating the efficacy and mechanism of action of vinblastine-based Antibody-Drug Conjugates (ADCs). Detailed protocols for key experiments are included to facilitate the assessment of ADC performance in preclinical studies.

Introduction to Vinblastine ADCs

Antibody-Drug Conjugates (ADCs) are a targeted cancer therapy that combines the specificity of a monoclonal antibody with the potent cytotoxic effects of a payload, in this case, vinblastine.[1][2] Vinblastine, a vinca alkaloid, functions by binding to tubulin and inhibiting the assembly of microtubules.[3][4] This disruption of microtubule dynamics leads to M-phase specific cell cycle arrest and ultimately induces apoptosis in cancer cells.[3][5] The efficacy of a vinblastine ADC is contingent on a series of events including binding to the target antigen on the tumor cell surface, internalization of the ADC-antigen complex, trafficking to the lysosome, and the subsequent release of the vinblastine payload.[6]

© 2026 BenchChem. All rights reserved.

This document outlines key cell-based assays to interrogate each step of this process:

- Cytotoxicity and Viability Assays: To determine the potency of the ADC in killing target cancer cells.
- Internalization Assays: To confirm that the ADC is being taken up by the target cells.
- Bystander Effect Assays: To assess the ability of the released vinblastine to kill neighboring antigen-negative cells.
- Apoptosis Assays: To confirm that the ADC induces programmed cell death.

I. Cytotoxicity and Viability Assays

Cytotoxicity assays are fundamental for screening promising ADC candidates and predicting their in vivo efficacy.[7][8] These assays measure the reduction in cell viability upon exposure to the ADC.

A. Key Concepts

- IC50 Value: The concentration of an ADC that inhibits the growth of a cell population by 50%. It is a standard measure of ADC potency.
- Payload-dependent Toxicity: For tubulin inhibitors like vinblastine, a longer incubation time (e.g., 72-96 hours) is often necessary to observe the full cytotoxic effect.[7]

B. Recommended Assay: CellTiter-Glo® Luminescent Cell Viability Assay

This assay determines the number of viable cells in culture based on the quantification of ATP, which is indicative of metabolically active cells.[9][10]

Experimental Protocol: CellTiter-Glo® Assay

Materials:

- Target antigen-positive and negative cancer cell lines

© 2026 BenchChem. All rights reserved.

- Vinblastine ADC
- Control antibody (without the drug)
- Complete cell culture medium
- 96-well white, clear-bottom assay plates
- CellTiter-Glo® Reagent (Promega)
- Luminometer

Procedure:

- Cell Seeding:
  - Harvest and count the cells.
  - Seed the cells in a 96-well plate at a pre-determined optimal density (e.g., 5,000-10,000 cells/well) in 100 µL of complete culture medium.[7]
  - Incubate the plate at 37°C with 5% CO2 overnight to allow for cell attachment.[7]
- ADC Treatment:
  - Prepare serial dilutions of the vinblastine ADC and control antibody in complete culture medium.
  - Remove the old media from the wells and add 100 µL of the prepared ADC or control solutions to the respective wells.
  - Include wells with untreated cells as a negative control.
  - Incubate the plate at 37°C for 72-96 hours.[7]
- Assay Measurement:
  - Equilibrate the plate and the CellTiter-Glo® Reagent to room temperature for approximately 30 minutes.[11]

© 2026 BenchChem. All rights reserved.

- Add 100 µL of CellTiter-Glo® Reagent to each well.[11]
- Mix the contents on an orbital shaker for 2 minutes to induce cell lysis.[11]
- Incubate the plate at room temperature for 10 minutes to stabilize the luminescent signal.[11]
- Measure the luminescence using a plate reader.[10]

- Data Analysis:
  - Subtract the background luminescence (wells with medium only).
  - Normalize the data to the untreated control wells (representing 100% viability).
  - Plot the cell viability (%) against the log of the ADC concentration and determine the IC50 value using a non-linear regression curve fit.

Data Presentation: Cytotoxicity of a Vinblastine ADC

Treatment Group	Concentration (nM)	Cell Viability (%)
Untreated Control	0	100
Vinblastine ADC	0.1	85.2
Vinblastine ADC	1	62.5
Vinblastine ADC	10	48.7
Vinblastine ADC	100	15.3
Vinblastine ADC	1000	2.1
Control Antibody	1000	98.6

II. ADC Internalization Assays

The internalization of an ADC is a prerequisite for the release of its cytotoxic payload.[12][13] These assays are crucial for selecting antibodies that are efficiently endocytosed upon antigen binding.[14]

© 2026 BenchChem. All rights reserved.

A. Key Concepts

- Receptor-Mediated Endocytosis: The primary mechanism for ADC internalization, where the binding of the ADC to its target antigen triggers the cell to engulf the ADC-antigen complex.[14]
- pH-Sensitive Dyes: These dyes, such as pHrodo, are non-fluorescent at neutral pH but become brightly fluorescent in the acidic environment of the endosomes and lysosomes, providing a direct measure of internalization.[15][16]

B. Recommended Assay: pHrodo Dye-Based Internalization Assay

This method allows for the real-time kinetic analysis of ADC internalization in live cells.[17]

Experimental Protocol: pHrodo-Based Internalization Assay

Materials:

- Target antigen-positive and negative cancer cell lines
- Vinblastine ADC
- pHrodo iFL Red STP Ester (or similar pH-sensitive dye)
- Labeling buffer (e.g., PBS, pH 8.3)
- Size-exclusion chromatography column (e.g., Sephadex G-25)
- Live-cell imaging system or flow cytometer
- Hoechst 33342 (for nuclear staining)

Procedure:

- ADC Labeling:

© 2026 BenchChem. All rights reserved.

- Label the vinblastine ADC with the pH-sensitive dye according to the manufacturer's instructions.
- Remove unconjugated dye using a size-exclusion chromatography column.

- Cell Treatment:
  - Seed cells in a 96-well imaging plate or appropriate culture vessel and allow them to attach overnight.
  - Treat the cells with the pHrodo-labeled vinblastine ADC at a suitable concentration.
  - Include a negative control of labeled, non-targeting IgG.
- Imaging and Analysis:
  - Acquire images at various time points (e.g., 0, 2, 4, 8, 24 hours) using a live-cell imaging system equipped for fluorescence microscopy.[18]
  - Counterstain the nuclei with Hoechst 33342 for cell segmentation.
  - Quantify the intracellular fluorescence intensity of the pHrodo dye over time. An increase in fluorescence indicates internalization into acidic compartments.[16]
  - Alternatively, analyze the cells by flow cytometry to quantify the percentage of fluorescent cells and the mean fluorescence intensity.

Data Presentation: Quantification of ADC Internalization

© 2026 BenchChem. All rights reserved.

Time (hours)	Mean Fluorescence Intensity (Antigen-Positive Cells)	Mean Fluorescence Intensity (Antigen-Negative Cells)
0	150	145
2	850	160
4	2500	180
8	6200	210
24	15500	250

III. Bystander Effect Assays

The bystander effect occurs when the cytotoxic payload released from the target cancer cell diffuses into the surrounding microenvironment and kills neighboring antigen-negative cells.[19] This is a critical mechanism for enhancing the therapeutic efficacy of ADCs, especially in heterogeneous tumors.[20]

A. Key Concepts

- Co-culture System: A method where antigen-positive and antigen-negative cells are grown together to mimic a heterogeneous tumor environment.[21]
- Conditioned Medium Transfer: An assay to determine if the cytotoxic agent is released into the medium and can kill cells without direct cell-to-cell contact.[22]

B. Recommended Assay: Co-Culture Bystander Killing Assay

This assay directly visualizes and quantifies the killing of antigen-negative cells in the presence of antigen-positive cells treated with the ADC.

Experimental Protocol: Co-Culture Bystander Killing Assay

Materials:

© 2026 BenchChem. All rights reserved.

- Antigen-positive cancer cell line
- Antigen-negative cancer cell line (engineered to express a fluorescent protein, e.g., GFP)[8]
- Vinblastine ADC
- Control ADC (non-cleavable linker or non-permeable payload)
- Live-cell imaging system
- Propidium Iodide (PI) or another dead-cell stain

Procedure:

- Cell Seeding:
  - Seed a co-culture of antigen-positive and GFP-expressing antigen-negative cells in a 96-well imaging plate at a defined ratio (e.g., 1:1).[20]
  - Allow the cells to attach overnight.
- ADC Treatment:
  - Treat the co-culture with the vinblastine ADC and a control ADC at a concentration that is cytotoxic to the antigen-positive cells but not directly to the antigen-negative cells.[21]
  - Include an untreated co-culture as a control.
- Imaging and Analysis:
  - Acquire images of both the GFP channel (for antigen-negative cells) and a brightfield or phase-contrast channel at regular intervals for 72-96 hours.
  - Add a dead-cell stain like PI to the media to visualize cell death in real-time.
  - Quantify the number of viable GFP-positive cells over time in the treated versus untreated wells. A decrease in the number of viable GFP-positive cells in the presence of the vinblastine ADC indicates a bystander effect.[20]

© 2026 BenchChem. All rights reserved.

Data Presentation: Bystander Killing of Antigen-Negative Cells

Time (hours)	% Viable Antigen-Negative Cells (Untreated)	% Viable Antigen-Negative Cells (Control ADC)	% Viable Antigen-Negative Cells (Vinblastine ADC)
0	100	100	100
24	102	98	95
48	105	96	75
72	110	95	48
96	115	94	22

IV. Apoptosis Assays

Vinblastine induces apoptosis, and confirming this mechanism of cell death is crucial for characterizing the ADC's mode of action.[23][24]

A. Key Concepts

- Annexin V: A protein that binds to phosphatidylserine, a phospholipid that is translocated from the inner to the outer leaflet of the plasma membrane during early apoptosis.[25]
- Propidium Iodide (PI): A fluorescent dye that can only enter cells with compromised membranes, characteristic of late apoptotic or necrotic cells.[26]

B. Recommended Assay: Annexin V/PI Staining by Flow Cytometry

This assay allows for the differentiation of viable, early apoptotic, late apoptotic, and necrotic cell populations.[27]

Experimental Protocol: Annexin V/PI Apoptosis Assay

Materials:

© 2026 BenchChem. All rights reserved.

- Target antigen-positive cancer cell line
- Vinblastine ADC
- Annexin V-FITC (or other fluorophore)
- Propidium Iodide (PI)
- Annexin V Binding Buffer
- Flow cytometer

Procedure:

- Cell Treatment:
  - Seed cells in a 6-well plate and treat with the vinblastine ADC at its IC50 concentration for a predetermined time (e.g., 48 hours).
  - Include an untreated control.
- Cell Harvesting and Staining:
  - Collect both adherent and floating cells.[25]
  - Wash the cells with cold PBS and centrifuge.
  - Resuspend the cell pellet in 1X Annexin V Binding Buffer.
  - Add Annexin V-FITC and PI to the cell suspension.[26]
  - Incubate the cells in the dark at room temperature for 15 minutes.[26]
- Flow Cytometry Analysis:
  - Analyze the stained cells on a flow cytometer.
  - Use appropriate controls to set up compensation and gates for:

© 2026 BenchChem. All rights reserved.

- Viable cells (Annexin V- / PI-)
- Early apoptotic cells (Annexin V+ / PI-)
- Late apoptotic/necrotic cells (Annexin V+ / PI+)
- Necrotic cells (Annexin V- / PI+)

Data Presentation: Apoptosis Induction by Vinblastine ADC

Cell Population	% of Cells (Untreated)	% of Cells (Vinblastine ADC Treated)
Viable (Annexin V- / PI-)	95.1	35.8
Early Apoptotic (Annexin V+ / PI-)	2.3	42.5
Late Apoptotic/Necrotic (Annexin V+ / PI+)	1.5	18.9
Necrotic (Annexin V- / PI+)	1.1	2.8

V. Visualizations

Signaling Pathway and Mechanism of Action

© 2026 BenchChem. All rights reserved.

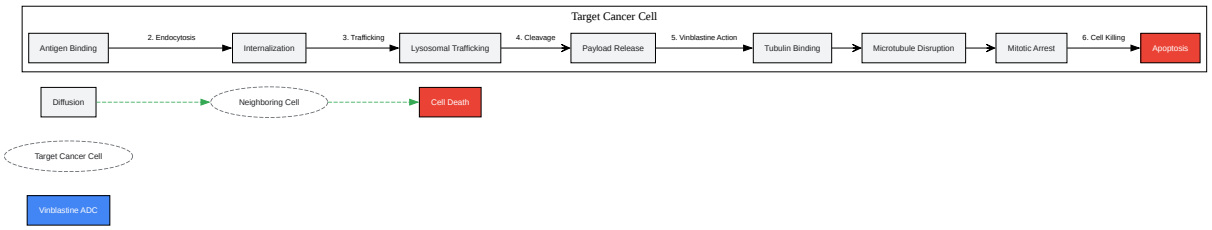

© 2026 BenchChem. All rights reserved.

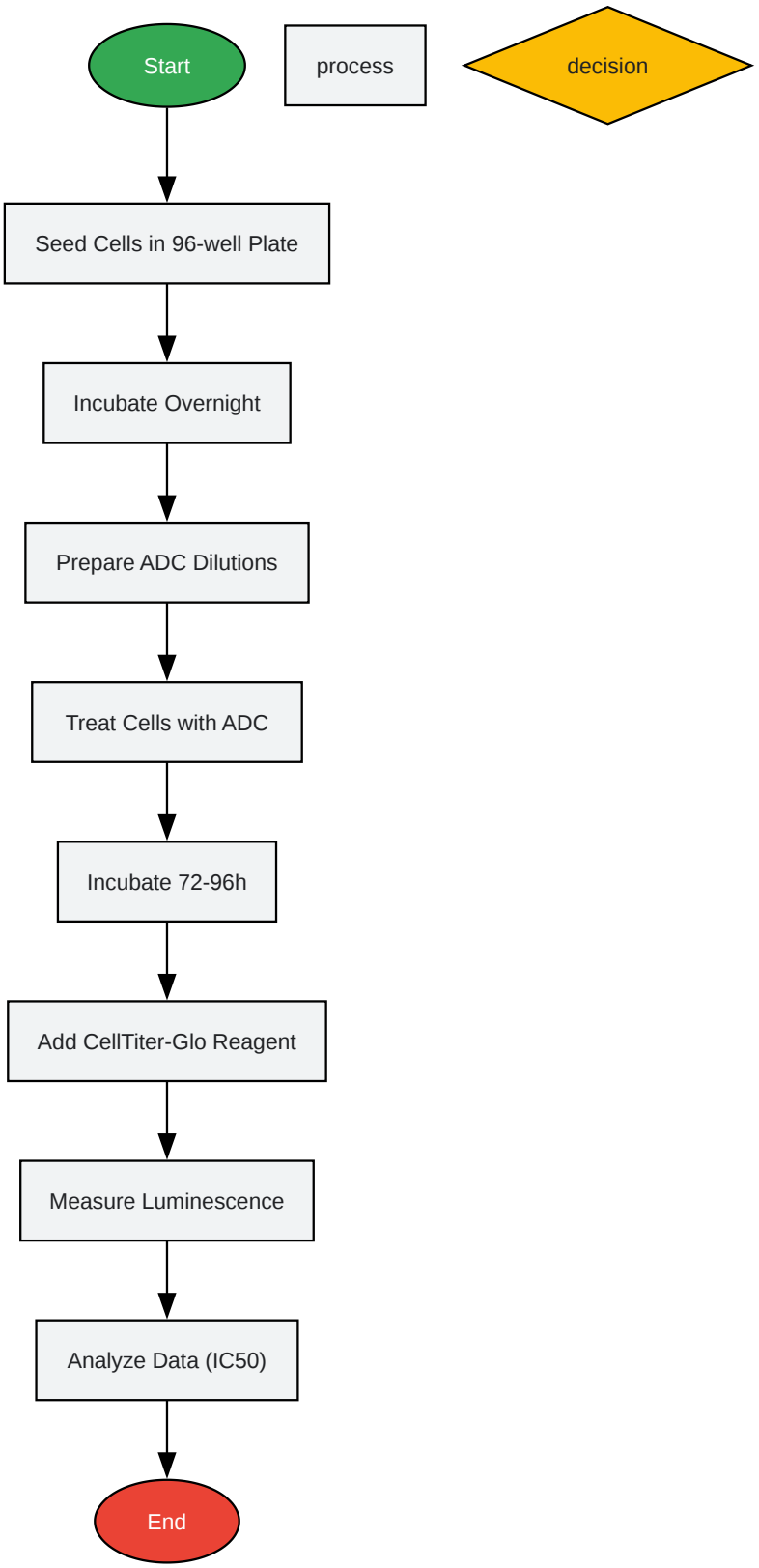

© 2026 BenchChem. All rights reserved.

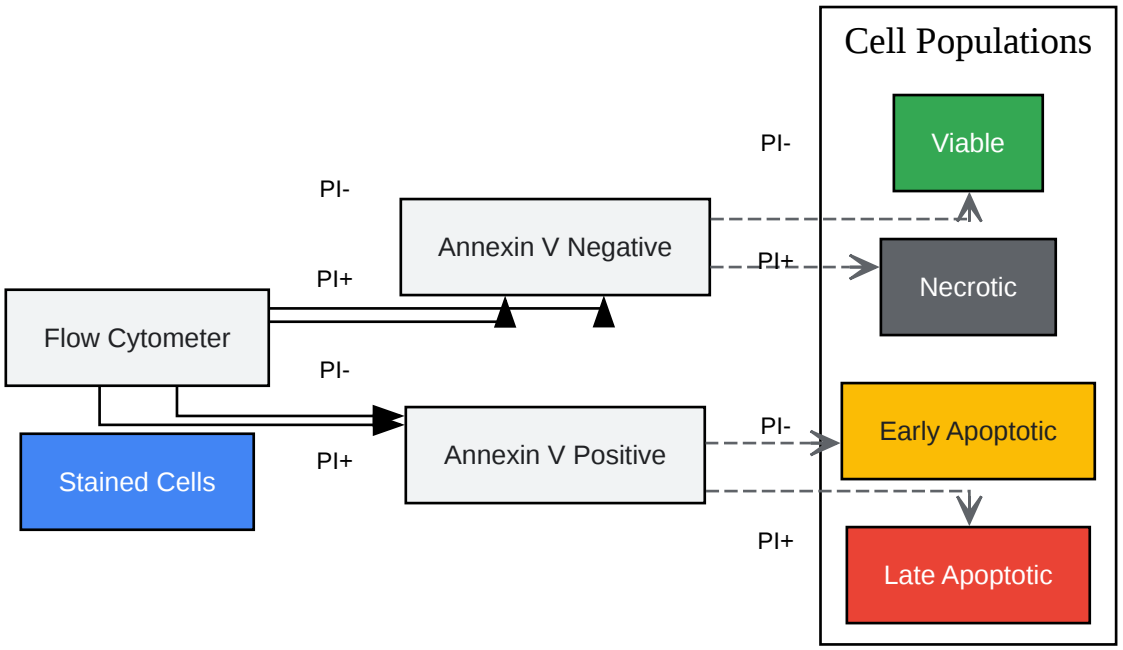

Click to download full resolution via product page

Need Custom Synthesis?

BenchChem offers custom synthesis for rare earth carbides and specific isotopiclabeling.

Email: info@benchchem.com or Request Quote Online.

References

- 1. Antibody Drug Conjugate - Cellomatics Biosciences [cellomaticsbio.com]
- 2. Antibody Drug Conjugate Discovery and Development [promega.com]
- 3. Vinblastine - Wikipedia [en.wikipedia.org]
- 4. go.drugbank.com [go.drugbank.com]
- 5. researchgate.net [researchgate.net]
- 6. benchchem.com [benchchem.com]
- 7. Determination of ADC Cytotoxicity - Creative Biolabs [creative-biolabs.com]
- 8. Determination of ADC Cytotoxicity in Immortalized Human Cell Lines - PMC [pmc.ncbi.nlm.nih.gov]

© 2026 BenchChem. All rights reserved.

- 9. CellTiter-Glo® 3D Cell Viability Assay Protocol [promega.jp]
- 10. CellTiter-Glo® Luminescent Cell Viability Assay Protocol [promega.com]
- 11. Cell Viability Assays - Assay Guidance Manual - NCBI Bookshelf [ncbi.nlm.nih.gov]
- 12. ADC antibody internalization assay-DIMA BIOTECH [dimabio.com]
- 13. Antibody Internalization Assay | Kyinno Bio [kyinno.com]
- 14. precisionantibody.com [precisionantibody.com]
- 15. Antibody Internalization | Thermo Fisher Scientific - US [thermofisher.com]
- 16. documents.thermofisher.com [documents.thermofisher.com]
- 17. revvity.com [revvity.com]
- 18. njbio.com [njbio.com]
- 19. in vitro assay development_In Vivo Pharmacology Assays - In Vitro Bystander Effect Assays - ICE Bioscience [en.ice-biosci.com]
- 20. agilent.com [agilent.com]
- 21. Quantitative Characterization of In Vitro Bystander Effect of Antibody-Drug Conjugates - PMC [pmc.ncbi.nlm.nih.gov]
- 22. aacrjournals.org [aacrjournals.org]
- 23. Vinblastine sensitizes leukemia cells to cyclin-dependent kinase inhibitors, inducing acute cell cycle phase-independent apoptosis - PMC [pmc.ncbi.nlm.nih.gov]
- 24. Vinblastine induces acute, cell cycle phase-independent apoptosis in some leukemias and lymphomas and can induce acute apoptosis in others when Mcl-1 is suppressed - PubMed [pubmed.ncbi.nlm.nih.gov]
- 25. Apoptosis Protocols | USF Health [health.usf.edu]
- 26. Protocol for Apoptosis Assay by Flow Cytometry Using Annexin V Staining Method - PMC [pmc.ncbi.nlm.nih.gov]
- 27. Flow cytometry-based apoptosis detection - PMC [pmc.ncbi.nlm.nih.gov]

- To cite this document: BenchChem. [Application Notes and Protocols for Cell-Based Assays of Vinblastine ADCs]. BenchChem, [2026]. [Online PDF]. Available at: [https://www.benchchem.com/product/b14027720/docs#application-notes-and-protocols-for-cell-based-assays-of-vinblastine-adcs]

Disclaimer & Data Validity:

© 2026 BenchChem. All rights reserved.

The information provided in this document is for Research Use Only (RUO) and is strictly not intended for diagnostic or therapeutic procedures. While BenchChem strives to provide accurate protocols, we make no warranties, express or implied, regarding the fitness of this product for every specific experimental setup.

Technical Support: The protocols provided are for reference purposes. Unsure if this reagent suits your experiment?

Need Industrial/Bulk Grade? Request Custom Synthesis Quote

BenchChem

Our mission is to be the trusted global source of essential and advanced chemicals, empowering scientists and researchers to drive progress in science and industry.

Contact

Address: 3281 E Guasti Rd

Ontario, CA 91761, United States

Phone: (601) 213-4426

Email: info@benchchem.com

Contact our Ph.D. Support Team for a compatibility check

© 2026 BenchChem. All rights reserved.