Technical Support Center: Advanced Benzene Functionalization

Author: BenchChem Technical Support Team. **Date**: February 2026

Compound of Interest		
Compound Name:	*Methyl 5-bromo-2-fluoro-3-iodobenzoate*	
Cat. No.:	*B14020013*	*Get Quote*

Overview: The "Crowded Ring" Challenge

Welcome to the Benzene Functionalization Helpdesk. If you are here, you have likely hit the "substitution wall."[1] Synthesizing mono- and di-substituted benzenes is undergraduate textbook chemistry. However, installing a third substituent—precisely where you want it—is where standard rules often collapse due to competing directing groups, steric clashing, and electronic deactivation.[1]

This guide addresses the three most common "support tickets" we receive regarding tri-substituted benzene synthesis. We move beyond basic Electrophilic Aromatic Substitution (EAS) into high-fidelity methods like Directed Ortho Metalation (DoM) and Iridium-catalyzed C-H activation.

Module 1: The 1,2,3-Conundrum (Regiocontrol Crises)

Ticket #1042:"I need a 1,2,3-substitution pattern. I tried standard bromination on my 1,3-disubstituted substrate, but I only get the 1,2,4-isomer. Why can't I access the position 'between' the two groups?"

Diagnosis: You are fighting the "Combined Directing Effects" rule. In a 1,3-disubstituted system, the position between the two substituents (C2) is the most sterically crowded. Even if both groups are ortho/para directors, the kinetic barrier to attack at C2 is often too high for standard

© 2026 BenchChem. All rights reserved.

EAS electrophiles, leading to substitution at the less hindered C4 or C6 positions (yielding the 1,2,4-isomer).[1]

Solution: Directed Ortho Metalation (DoM) To access the 1,2,3-pattern, you must abandon charge-control (EAS) and switch to coordination-control.[1] You need a Directed Ortho Metalation (DoM) strategy.[2] This relies on a Directing Metalation Group (DMG) that coordinates a strong lithium base (e.g., n-BuLi), bringing it into proximity with the ortho-proton via the Complex-Induced Proximity Effect (CIPE).

Troubleshooting DoM Failures:

© 2026 BenchChem. All rights reserved.

Symptom	Probable Cause	Corrective Action
No Reaction (Recovered SM)	Aggregated Base	Add a de-aggregating agent like TMEDA (N,N,N',N'-tetramethylethylenediamine) or DMPU to increase the kinetic basicity of the alkyllithium.
Scrambled Regiochemistry	Thermodynamic Equilibration	Keep internal temperature below -78 °C. If the "kinetic" lithio-species warms up, it may isomerize to the thermodynamic (more stable) position (often away from the DMG).
Protonated Product	Quench Failure	The lithiated species is highly moisture sensitive. Ensure the electrophile is dry and added rapidly at low temp to outcompete proton transfer.
Nucleophilic Attack on DMG	Weak DMG Resistance	If your DMG is an ester or ketone, n-BuLi will attack the carbonyl. Switch to "Super DMGs" like Carbamates (O-$CONEt_2$) or Amides ($CONEt_2$) which resist nucleophilic attack.

Visualizing the Solution (CIPE Mechanism):

© 2026 BenchChem. All rights reserved.

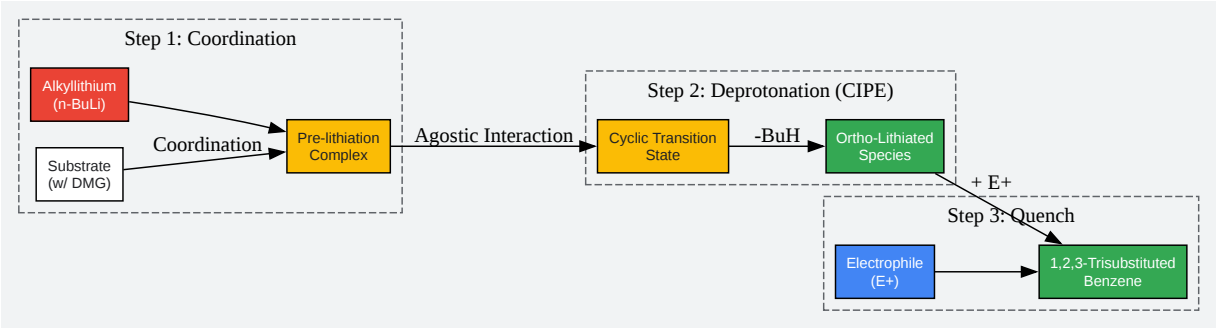

Click to download full resolution via product page

Caption: The Complex-Induced Proximity Effect (CIPE) allows regioselective deprotonation at the sterically hindered C2 position.

Module 2: The "Inert" Meta-Position (C-H Activation)

Ticket #2089:"I need to install a boronic ester at the meta-position of a monosubstituted arene. Standard lithiation goes ortho. How do I force meta-selectivity?"

Diagnosis: Lithiation is guided by acidity (ortho protons are often acidified by inductive effects) and coordination (DoM). To hit the meta position, you need a catalyst that is controlled by sterics rather than electronics.[1]

Solution: Iridium-Catalyzed C-H Borylation Iridium catalysts supported by bipyridine ligands (e.g., $[Ir(OMe)(cod)]_2$ + dtbpy) are highly sensitive to steric bulk. They will preferentially activate the C-H bond furthest from existing substituents.

- 1,2-disubstituted arenes

  Reaction occurs at C4/C5 (Meta/Para to substituents).

- 1,3-disubstituted arenes

  Reaction occurs at C5 (The only position meta to both groups).

© 2026 BenchChem. All rights reserved.

Troubleshooting Ir-Borylation:

- Q: My reaction is slow/stalled.
  - A: Are you using an inert atmosphere? The active Ir(III)-tris(boryl) species is air-sensitive. Also, ensure you are removing the H_2 byproduct (open system or hydrogen acceptor like norbornene) to drive the equilibrium.
- Q: I'm getting a mixture of meta and para.
  - A: This is common with small substituents (F, Me).[1] To enforce high meta-selectivity, consider using a Transient Directing Group or a bulky ligand that creates a "steric roof," shielding the para position.[1]

Module 3: The 1,3,5-Symmetry Trap

Ticket #3015:"I'm trying to make a 1,3,5-trisubstituted benzene by adding groups sequentially. The yield drops with each step. Is there a better way?"

Diagnosis: Sequential synthesis of symmetrical 1,3,5-systems is inefficient ("The Linear Synthesis Trap").[1] You are fighting deactivation and directing group conflicts at every step.

Solution: Convergent Cyclotrimerization Instead of modifying a benzene ring, build the ring from alkynes. Transition metal-catalyzed [2+2+2] cyclotrimerization is the gold standard for 1,3,5-systems.[1]

- Catalyst: Co, Rh, or Ru complexes (e.g., Cp*RuCl(cod)).[1]
- Mechanism: Three alkynes coordinate to the metal, form a metallacyclopentadiene, and insert the third alkyne.[1]
- Regiocontrol: Terminal alkynes typically yield 1,2,4- and 1,3,5-isomers.[1] To favor the 1,3,5-isomer, use sterically demanding alkynes or specific catalysts like dicobalt octacarbonyl on solid support.[1]

Experimental Protocol: 1,2,3-Functionalization via DoM

© 2026 BenchChem. All rights reserved.

Objective: Synthesis of 2-iodo-3-methyl-N,N-diethylbenzamide from 3-methyl-N,N-diethylbenzamide. Rationale: The diethylamide group is a powerful DMG that will direct lithiation to the C2 position (between the amide and methyl), overcoming the steric crowding.

Reagents:

- Substrate: 3-methyl-N,N-diethylbenzamide (1.0 equiv)
- Base: s-BuLi (1.1 equiv, 1.3 M in cyclohexane) – Note: s-BuLi is more basic than n-BuLi, often required for hindered protons.[1]
- Additive: TMEDA (1.1 equiv)
- Electrophile: Iodine (I_2) (1.2 equiv) in THF.
- Solvent: Anhydrous THF.

Step-by-Step Workflow:

- Setup: Flame-dry a 2-neck round bottom flask under Argon. Add substrate (1.0 g, 5.2 mmol) and TMEDA (0.86 mL, 5.7 mmol) in THF (20 mL).
- Cooling: Cool the solution to -78 °C (Dry ice/acetone bath). Critical: Wait 15 mins to ensure thermal equilibrium.
- Metalation: Add s-BuLi dropwise over 10 minutes.
  - Checkpoint: The solution often turns a deep color (yellow/orange) indicating the formation of the lithiated species.
  - Incubation: Stir at -78 °C for 1 hour. Do NOT warm up, or the lithium may migrate to the benzylic position (lateral lithiation).
- Quench: Dissolve Iodine (1.6 g) in THF (5 mL) and add it rapidly to the cold lithiated solution.
  - Why Rapidly? Slow addition can lead to "halogen dance" side reactions or protonation by mixing with adventitious moisture.

© 2026 BenchChem. All rights reserved.

- Workup: Allow to warm to RT. Quench with sat. aq. $Na_2S_2O_3$ (to reduce excess iodine). Extract with EtOAc, wash with brine, dry over $MgSO_4$.[1]

Decision Matrix: Selecting the Right Route

Use this logic flow to determine the best synthetic strategy for your target.

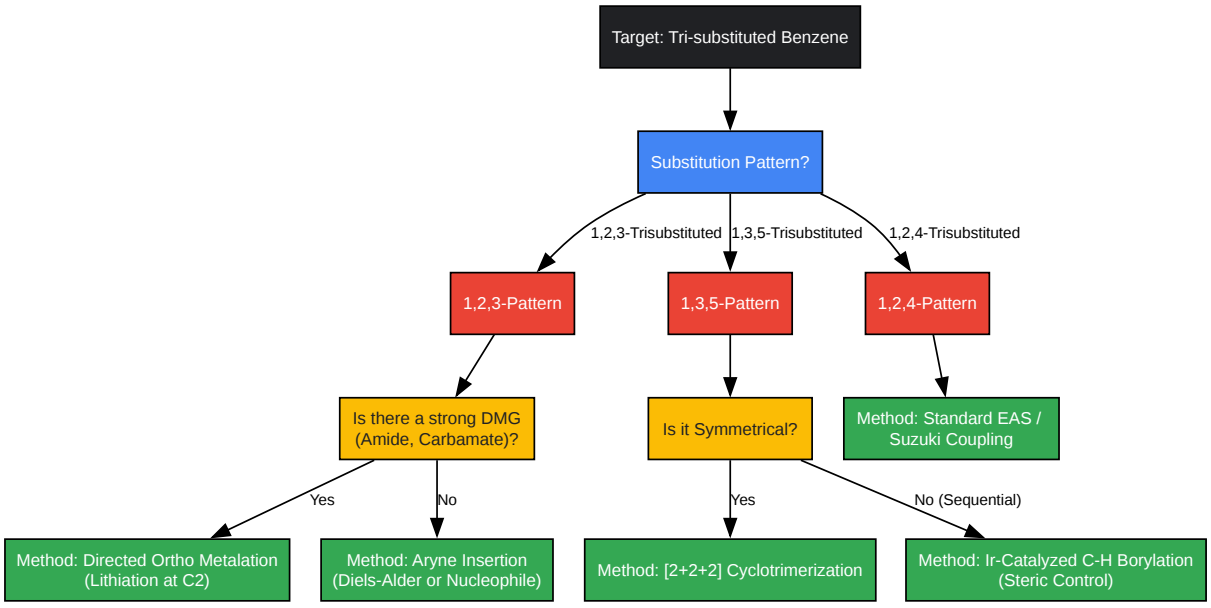

Click to download full resolution via product page

Caption: Strategic decision tree for selecting the optimal synthetic pathway based on substitution pattern and substrate functionality.

References

- Snieckus, V. (1990). "Directed ortho metalation. Tertiary amide and O-carbamate directors in synthetic strategies for polysubstituted aromatics." Chemical Reviews, 90(6), 879–933.[1] Link

© 2026 BenchChem. All rights reserved.

- Hartwig, J. F. (2012). "Borylation and Silylation of C–H Bonds: A Platform for Diverse C–H Bond Functionalizations." Accounts of Chemical Research, 45(6), 864–873.[1] Link
- Yamamoto, Y. (2008). "Transition-Metal-Catalyzed [2+2+2] Cycloaddition for the Synthesis of Substituted Benzenes." Current Organic Chemistry, 12(15), 1334-1355.[1]
- Schlosser, M. (2005). "The 2×3 Toolbox of Organometallic Methods for Regiochemically Exhaustive Functionalization." Angewandte Chemie International Edition, 44(3), 376–393.[1] Link
- Itami, K., et al. (2015).[1] "Programmed synthesis of aryl-substituted benzenes." Nature Chemistry, 7, 227–233.[1] Link

Need Custom Synthesis?

BenchChem offers custom synthesis for rare earth carbides and specific isotopiclabeling.

Email: info@benchchem.com or Request Quote Online.

Sources

- 1. CN106316900A - 1, 2, 3-tri-substituted benzene and method for synthesizing same - Google Patents [patents.google.com]
- 2. m.youtube.com [m.youtube.com]
- To cite this document: BenchChem. [Technical Support Center: Advanced Benzene Functionalization]. BenchChem, [2026]. [Online PDF]. Available at: [https://www.benchchem.com/product/b14020013#challenges-in-the-synthesis-of-tri-substituted-benzene-rings]

Disclaimer & Data Validity:

The information provided in this document is for Research Use Only (RUO) and is strictly not intended for diagnostic or therapeutic procedures. While BenchChem strives to provide accurate protocols, we make no warranties, express or implied, regarding the fitness of this product for every specific experimental setup.

© 2026 BenchChem. All rights reserved.

Technical Support: The protocols provided are for reference purposes. Unsure if this reagent suits your experiment? [Contact our Ph.D. Support Team for a compatibility check]

Need Industrial/Bulk Grade? Request Custom Synthesis Quote

BenchChem

Our mission is to be the trusted global source of essential and advanced chemicals, empowering scientists and researchers to drive progress in science and industry.

Contact

Address: 3281 E Guasti Rd

Ontario, CA 91761, United States

Phone: (601) 213-4426

Email: info@benchchem.com

© 2026 BenchChem. All rights reserved.