Application Note: Analytical Quantification of 3-Phenylpyridine-4-carboxamide

Author: BenchChem Technical Support Team. **Date**: May 2026

Compound of Interest

Compound Name:	*3-Phenylpyridine-4-carboxamide*
CAS No.:	*1414965-07-3*
Cat. No.:	*B1400661*

Get Quote

Analyte Profile & Physicochemical Context[1][2][3][4][5][6][7][8][9][10][11][12]

Before method selection, understanding the analyte's behavior is critical for column and mobile phase selection.

© 2026 BenchChem. All rights reserved.

Property	Value / Characteristic	Analytical Implication
Chemical Structure	3-phenylpyridine-4-carboxamide	Biaryl system; potential for steric hindrance between rings.
Formula / MW	$C_{12}H_{10}N_2O$ / 198.22 g/mol	Amenable to ESI+ MS detection ($[M+H]^+$ = 199.2).
pKa (Calculated)	~5.2 (Pyridine Nitrogen)	Basic. Retains well on C18 at pH > 6 or with ion-pairing at low pH.
LogP	~1.6	Moderate hydrophobicity. Ideal for Reversed-Phase LC.
UV Maxima	~250 nm, ~280 nm	Strong absorbance due to conjugated biaryl system.
Solubility	Soluble in MeOH, DMSO, ACN	Diluents should match initial mobile phase strength.

Analytical Strategy & Decision Matrix

The choice of method depends on the required sensitivity and matrix complexity.

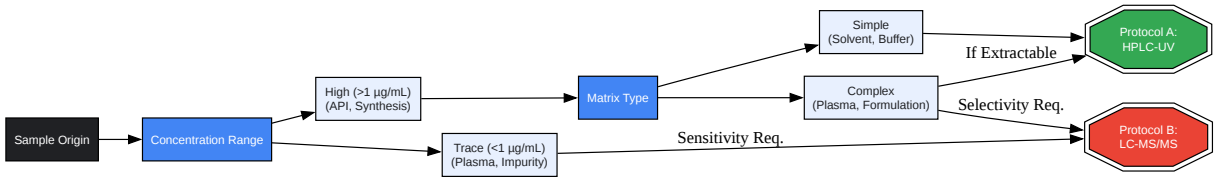

Click to download full resolution via product page

Figure 1: Decision tree for selecting the appropriate analytical workflow based on sample concentration and matrix complexity.

© 2026 BenchChem. All rights reserved.

Protocol A: HPLC-UV for Purity and Assay

Scope: Routine quality control, reaction monitoring, and stability testing.

Chromatographic Conditions

- System: Agilent 1290 Infinity II or Waters Alliance e2695.
- Column: Phenomenex Luna Omega C18 PS (Polar Switch) or Waters XBridge BEH C18.
  - Rationale: The "PS" or "BEH" chemistries resist dewetting and provide better peak shape for basic pyridines compared to standard silica.
- Dimensions: 150 x 4.6 mm, 3.5 µm (or 5 µm).
- Column Temp: 35°C.
- Flow Rate: 1.0 mL/min.[1][2]
- Detection: UV-DAD at 254 nm (primary) and 280 nm (secondary).
- Injection Volume: 10 µL.

Mobile Phase & Gradient

- Solvent A: 10 mM Ammonium Acetate in Water, pH 5.5 (adjusted with dilute Acetic Acid).
  - Why pH 5.5? At pH 5.5, the pyridine (pKa ~5.2) is partially ionized, but the buffer capacity suppresses secondary silanol interactions, reducing peak tailing.
- Solvent B: Acetonitrile (HPLC Grade).

© 2026 BenchChem. All rights reserved.

Time (min)	% Solvent A	% Solvent B	Curve
0.0	95	5	Initial
2.0	95	5	Hold
12.0	30	70	Linear
15.0	5	95	Wash
18.0	5	95	Hold
18.1	95	5	Re-equilibrate
23.0	95	5	End

Sample Preparation (Drug Substance)

- Stock Solution: Weigh 10.0 mg of 3-PP-4C reference standard into a 10 mL volumetric flask. Dissolve in 50:50 ACN:Water. (Conc: 1.0 mg/mL).[3]
- Working Standard: Dilute Stock 1:10 with Mobile Phase A to obtain 100 µg/mL.
- Filtration: Filter through a 0.22 µm PTFE or Nylon syringe filter prior to injection.

System Suitability Criteria

- Tailing Factor (T): NMT 1.5 (Critical for pyridine derivatives).
- Theoretical Plates (N): > 5,000.
- RSD (n=6): < 1.0% for retention time and area.

Protocol B: LC-MS/MS for Trace Quantitation

Scope: Bioanalysis (PK studies) or Genotoxic Impurity (GTI) screening.

Mass Spectrometry Parameters

- Interface: Electrospray Ionization (ESI) in Positive Mode.

© 2026 BenchChem. All rights reserved.

- Scan Type: Multiple Reaction Monitoring (MRM).
- Precursor Ion:m/z 199.2 $[M+H]^+$.

MRM Transitions:

Transition	Type	Collision Energy (eV)	Dwell (ms)	Interpretation
199.2 → 182.1	**Quantifier**	**15**	**100**	**Loss of NH_3 (Amide cleavage)**
199.2 → 154.1	Qualifier	25	100	Loss of -$CONH_2$ (Carboxamide)

| 199.2 → 127.1 | Qualifier | 35 | 100 | Pyridine ring fragmentation |

Note: Collision energies are instrument-dependent (optimized here for Sciex Triple Quad 6500+).

Chromatographic Conditions (UHPLC)

- Column: Waters ACQUITY UPLC BEH C18, 2.1 x 50 mm, 1.7 µm.
- Mobile Phase A: 0.1% Formic Acid in Water.
- Mobile Phase B: 0.1% Formic Acid in Acetonitrile.
- Flow Rate: 0.4 mL/min.
- Gradient: Fast generic gradient (5-95% B in 3 minutes).

Bioanalytical Sample Prep (Protein Precipitation)

- Aliquot: Transfer 50 µL of plasma into a 96-well plate.
- IS Addition: Add 10 µL of Internal Standard (e.g., d5-**3-Phenylpyridine-4-carboxamide** or generic d5-Diazepam).

© 2026 BenchChem. All rights reserved.

- Precipitation: Add 200 µL of ice-cold Acetonitrile.
- Agitation: Vortex for 2 minutes at 1500 rpm.
- Centrifugation: 4000g for 10 minutes at 4°C.
- Transfer: Inject 2 µL of the supernatant.

Method Validation Framework (ICH Q2)

To ensure "Trustworthiness" and "Authoritative Grounding," the method must be validated against ICH Q2(R1) guidelines.

Parameter	Acceptance Criteria (HPLC-UV)	Acceptance Criteria (LC-MS/MS)
Specificity	No interference at RT of analyte from blank/placebo.	Signal in blank < 20% of LLOQ.
Linearity	$R^2 > 0.999$ (Range: 80-120% of target).	$R^2 > 0.99$ (Range: LLOQ to ULOQ).
Accuracy	98.0% - 102.0% recovery.	85-115% (Bioanalysis).
Precision	RSD < 1.0% (Repeatability).	CV < 15% (Bioanalysis).
LOD / LLOQ	S/N > 3 (LOD), S/N > 10 (LOQ).	S/N > 10 (LLOQ).

Experimental Workflow Diagram

© 2026 BenchChem. All rights reserved.

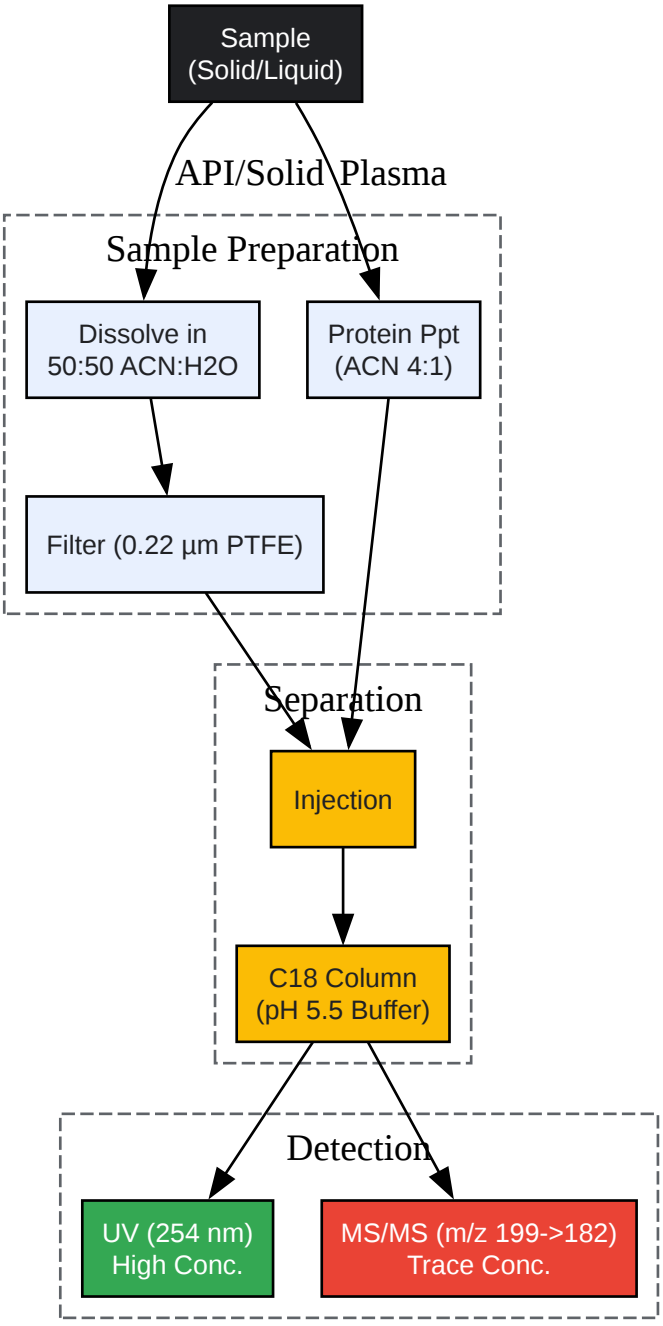

Click to download full resolution via product page

Figure 2: End-to-end experimental workflow for sample processing and analysis.

Troubleshooting & Expert Insights

Peak Tailing

© 2026 BenchChem. All rights reserved.

- Cause: Interaction between the basic pyridine nitrogen and residual silanols on the silica support.

- Solution: Ensure the mobile phase contains adequate buffer strength (>10 mM). If tailing persists, add 0.1% Triethylamine (TEA) to the mobile phase as a silanol blocker, or switch to a "Hybrid" particle column (e.g., Waters XBridge) which operates at high pH (pH 10) where the pyridine is deprotonated (neutral).

Carryover (LC-MS/MS)

- Cause: Adsorption of the hydrophobic phenyl group to the injector needle.

- Solution: Use a strong needle wash: 50:25:25 Isopropanol:Acetonitrile:Water + 0.1% Formic Acid.

Isomer Interference

- Risk:N-phenylisonicotinamide (isomer) may co-elute.

- Verification: These isomers have different fragmentation patterns. 3-PP-4C will show strong loss of NH3 (17 Da), whereas N-phenylisonicotinamide often cleaves at the amide bond to release aniline (93 Da). Use the transition 199 -> 94 (aniline+H) to rule out the N-phenyl isomer.

References

- International Conference on Harmonisation (ICH). (2005). Validation of Analytical Procedures: Text and Methodology Q2(R1). Retrieved from [Link]

- Dolan, J. W. (2002). Peak Tailing and Resolution. LCGC North America. Retrieved from [Link]

- PubChem. (2023). Compound Summary: N-phenylisonicotinamide (Isomer reference). National Library of Medicine. Retrieved from [Link]

- Center for Drug Evaluation and Research (CDER). (2015). Bioanalytical Method Validation Guidance for Industry. FDA. Retrieved from [Link]

© 2026 BenchChem. All rights reserved.

Need Custom Synthesis?

BenchChem offers custom synthesis for rare earth carbides and specific isotopiclabeling.

Email: info@benchchem.com or Request Quote Online.

Sources

- 1. jfda-online.com [jfda-online.com]
- 2. scholarsresearchlibrary.com [scholarsresearchlibrary.com]
- 3. acgpubs.org [acgpubs.org]
- To cite this document: BenchChem. [Application Note: Analytical Quantification of 3-Phenylpyridine-4-carboxamide]. BenchChem, [2026]. [Online PDF]. Available at: [https://www.benchchem.com/product/b1400661/docs#application-note-analytical-quantification-of-3-phenylpyridine-4-carboxamide]

Disclaimer & Data Validity:

The information provided in this document is for Research Use Only (RUO) and is strictly not intended for diagnostic or therapeutic procedures. While BenchChem strives to provide accurate protocols, we make no warranties, express or implied, regarding the fitness of this product for every specific experimental setup.

Technical Support: The protocols provided are for reference purposes. Unsure if this reagent suits your experiment?

Need Industrial/Bulk Grade? Request Custom Synthesis Quote

BenchChem

Our mission is to be the trusted global source of essential and advanced chemicals, empowering scientists and researchers to drive progress in science and industry.

Contact

Address: 3281 E Guasti Rd

Ontario, CA 91761, United States

Phone: (601) 213-4426

Email: info@benchchem.com

© 2026 BenchChem. All rights reserved.

Contact our Ph.D. Support Team for a compatibility check

© 2026 BenchChem. All rights reserved.