Application Notes and Protocols for the Synthesis of 3-Picoline

Author: BenchChem Technical Support Team. **Date**: May 2026

Compound of Interest	
Compound Name:	*3-(3-Pyridyl)acrolein*
CAS No.:	*28447-15-6*
Cat. No.:	*B014957*

Get Quote

A Note on the Synthetic Route: The requested synthesis of 3-picoline from **3-(3-Pyridyl)acrolein** and ammonia is not a chemically conventional or feasible pathway. The starting material, **3-(3-Pyridyl)acrolein**, is a more complex molecule than the target, 3-picoline (3-methylpyridine). The established and industrially significant method for synthesizing 3-picoline involves the reaction of simpler aldehydes, primarily acrolein and acetaldehyde, with ammonia over a catalyst. This guide will, therefore, focus on this scientifically validated and widely practiced synthesis.

Introduction: The Industrial Synthesis of 3-Picoline from Acrolein and Ammonia

3-Picoline is a vital chemical intermediate in the pharmaceutical and agrochemical industries, most notably as a precursor to nicotinic acid (Niacin) and nicotinamide, as well as various insecticides. The dominant manufacturing process involves the gas-phase condensation of aldehydes with ammonia over a solid acid catalyst. The reaction of acrolein with ammonia is a key route to producing a mixture of pyridine and 3-picoline.[1][2] The selectivity towards 3-picoline can be enhanced by the co-feeding of other aldehydes and by careful selection of the catalyst and reaction conditions.

© 2026 BenchChem. All rights reserved.

The overall transformation is a complex series of reactions including Michael additions, aldol condensations, cyclizations, and dehydrogenations. The catalyst, typically a solid acid like an aluminosilicate or a modified zeolite, plays a crucial role in promoting these steps while minimizing side reactions and polymerization of the highly reactive acrolein.[1][2][3]

Reaction Mechanism: From Acrolein and Ammonia to 3-Picoline

The formation of 3-picoline from acrolein and ammonia is a multi-step process. While the precise mechanism can vary with the catalyst and conditions, a plausible pathway involves the following key transformations:

- Iminopropenal Formation: Acrolein reacts with ammonia to form an imine, 1-amino-1,3-butadiene, via a 1,4-addition followed by dehydration.
- Michael Addition: A second molecule of acrolein undergoes a Michael addition with the enamine intermediate.
- Cyclization and Dehydration: The resulting intermediate undergoes an intramolecular cyclization and subsequent dehydration to form a dihydropyridine derivative.
- Dehydrogenation: The dihydropyridine is then dehydrogenated to the aromatic 3-picoline.

The catalyst's acidic sites are crucial for the dehydration and cyclization steps, while its metallic components (if any) can facilitate the dehydrogenation.

© 2026 BenchChem. All rights reserved.

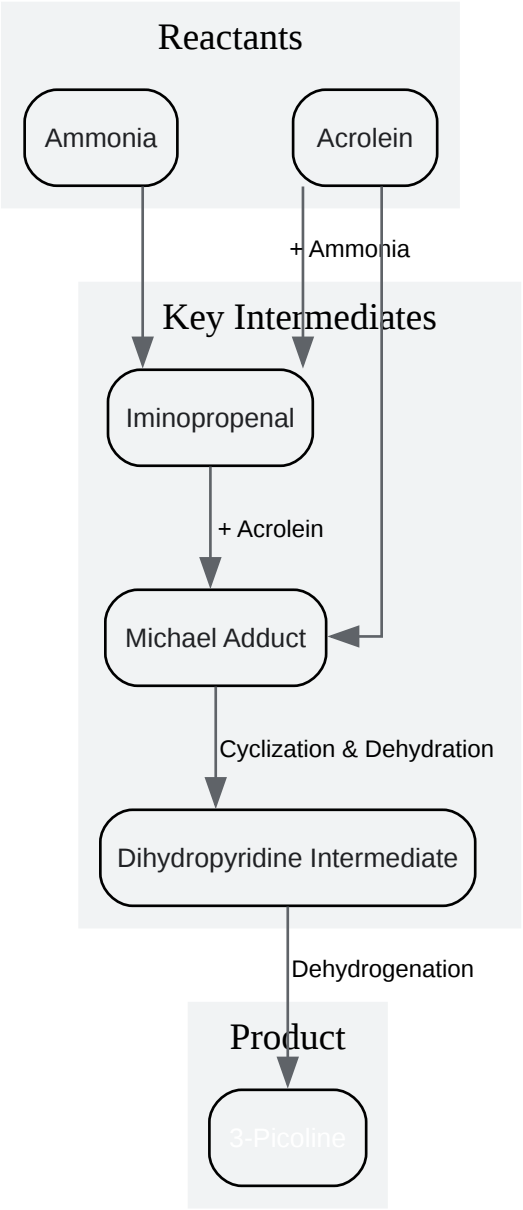

Click to download full resolution via product page

Caption: Plausible reaction pathway for the synthesis of 3-picoline.

Experimental Protocols

Two primary approaches for this synthesis are prevalent: a gas-phase continuous process, common in industrial settings, and a liquid-phase batch process, which can be adapted for laboratory-scale synthesis.

© 2026 BenchChem. All rights reserved.

Protocol 1: Gas-Phase Synthesis over a Solid Acid Catalyst

This protocol is based on the continuous gas-phase reaction typically employed for large-scale production, using a fixed-bed reactor. Zeolite catalysts, such as HZSM-5, are often used.[1][3][4][5]

Materials and Reagents:

Reagent/Material	Grade	Supplier	Notes
Acrolein	≥97%	Sigma-Aldrich	Inhibited with hydroquinone. Highly toxic and flammable.
Ammonia	Anhydrous	Airgas	Corrosive gas.
Nitrogen	High Purity	Airgas	Inert carrier gas.
HZSM-5 Catalyst	Si/Al ratio ~25-50	Zeolyst	Should be calcined before use.
Quartz Wool	-	VWR	For packing the reactor.
Deionized Water	-	-	For generating steam if required.

Equipment:

- Fixed-bed catalytic reactor (quartz or stainless steel tube)
- Tube furnace with temperature controller
- Mass flow controllers for gases
- Syringe pump for liquid feed
- Condenser and cold trap system

© 2026 BenchChem. All rights reserved.

- Gas chromatograph (GC) for product analysis

Workflow:

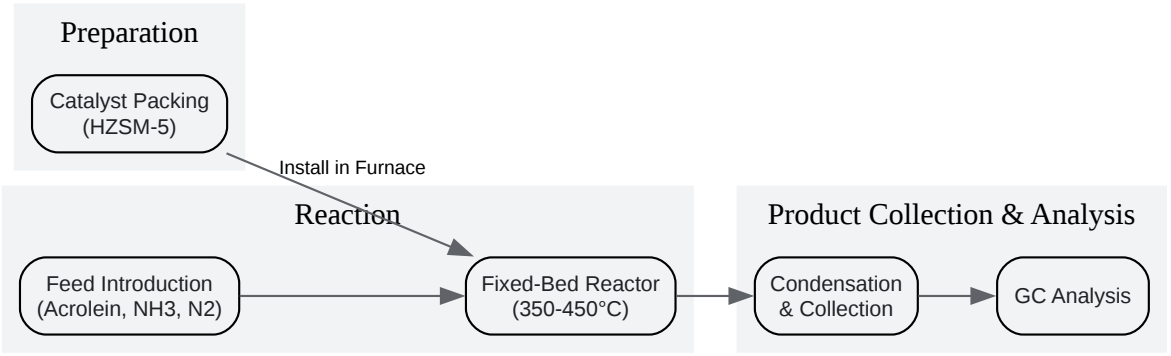

Click to download full resolution via product page

Caption: Workflow for gas-phase synthesis of 3-picoline.

Procedure:

- Catalyst Preparation: Pack the fixed-bed reactor with a known amount of HZSM-5 catalyst, securing it with quartz wool plugs. Calcine the catalyst in situ under a flow of air or nitrogen at 500-550°C for 4-6 hours to remove any adsorbed water and organic impurities.
- System Purge: Purge the entire system with nitrogen to ensure an inert atmosphere.
- Reaction Initiation: Heat the reactor to the desired reaction temperature (typically 350-450°C).
- Feed Introduction: Introduce the reactants into the reactor using mass flow controllers for ammonia and nitrogen, and a syringe pump for acrolein. A typical molar ratio might be Acrolein:Ammonia:Water:N2 = 1:3:5:5. The use of water (as steam) can help to suppress coke formation.
- Product Collection: The reactor effluent is passed through a series of condensers and cold traps (ice-water or dry ice-acetone) to collect the liquid products.

© 2026 BenchChem. All rights reserved.

- Analysis: The collected organic layer is separated from the aqueous layer and analyzed by Gas Chromatography (GC) to determine the conversion of acrolein and the selectivity to 3-picoline and other pyridine bases.

Key Parameters:

Parameter	Typical Range	Impact
Temperature	350 - 450°C	Higher temperatures can increase conversion but may lead to cracking and lower selectivity.
Pressure	Atmospheric	Higher pressures are generally not required.
NH3/Acrolein Ratio	3:1 to 6:1	A higher ratio favors pyridine formation and suppresses acrolein polymerization.[6][7]
Catalyst	HZSM-5, ZnO/HZSM-5, Modified Zeolites	Catalyst acidity and pore structure are critical for selectivity and catalyst lifetime.[3][4][6]
Space Velocity (WHSV)	0.5 - 2.0 h^{-1}	Affects reactant conversion and product distribution.

Protocol 2: Liquid-Phase Synthesis in a Batch Reactor

A liquid-phase synthesis can be more manageable on a laboratory scale. This approach often uses an ammonium salt as the ammonia source and a solvent.[2][8][9]

Materials and Reagents:

© 2026 BenchChem. All rights reserved.

Reagent/Material	Grade	Supplier	Notes
Acrolein	≥97%	Sigma-Aldrich	Highly toxic and flammable.
Ammonium Acetate	ACS Reagent	Fisher Scientific	Serves as the ammonia source.
Acetic Acid	Glacial	VWR	Solvent and acid catalyst.
Solid Acid Catalyst (optional)	SO_4^{2-}/ZrO_2-FeZSM-5	Custom Synthesis	Can enhance yield and selectivity.[2]
Toluene	HPLC Grade	Fisher Scientific	For extraction.
Sodium Bicarbonate	Saturated Solution	-	For neutralization.

Equipment:

- Three-neck round-bottom flask
- Reflux condenser
- Mechanical stirrer
- Heating mantle with temperature controller
- Addition funnel
- Separatory funnel

Procedure:

- Reactor Setup: In a three-neck flask equipped with a stirrer, reflux condenser, and addition funnel, dissolve ammonium acetate in glacial acetic acid. If using a solid catalyst, add it at this stage.
- Heating: Heat the mixture to the desired reaction temperature (e.g., 110-130°C) with vigorous stirring.[2]

© 2026 BenchChem. All rights reserved.

- Acrolein Addition: Prepare a solution of acrolein in acetic acid. Add this solution dropwise to the hot reaction mixture via the addition funnel over a period of 2-4 hours. A slow addition rate is crucial to minimize acrolein polymerization.
- Reaction Completion: After the addition is complete, maintain the reaction at temperature for an additional 1-2 hours to ensure complete conversion.
- Work-up:
  - Cool the reaction mixture to room temperature.
  - Carefully neutralize the mixture with a saturated solution of sodium bicarbonate until the effervescence ceases.
  - Extract the aqueous layer with toluene (3 x 50 mL).
  - Combine the organic extracts, dry over anhydrous sodium sulfate, filter, and concentrate under reduced pressure.
- Analysis and Purification: Analyze the crude product by GC and GC-MS. Purify the 3-picoline by fractional distillation.

Safety and Waste Disposal

- Acrolein: Acrolein is extremely toxic, a severe lachrymator, and highly flammable. All manipulations must be performed in a well-ventilated chemical fume hood. Personal protective equipment (gloves, safety goggles, lab coat) is mandatory.
- Ammonia: Anhydrous ammonia is a corrosive gas that can cause severe burns upon contact. Use in a fume hood and have appropriate emergency procedures in place.
- Waste Disposal: The aqueous waste from the liquid-phase synthesis will be acidic and should be neutralized before disposal. Organic waste containing residual acrolein and pyridine bases should be collected and disposed of as hazardous chemical waste according to institutional guidelines.

Product Characterization

© 2026 BenchChem. All rights reserved.

The identity and purity of the synthesized 3-picoline should be confirmed using standard analytical techniques:

- Gas Chromatography (GC): To determine the purity of the product and the relative amounts of any pyridine byproducts.
- Gas Chromatography-Mass Spectrometry (GC-MS): To confirm the molecular weight (93.13 g/mol) and fragmentation pattern of 3-picoline.
- ^{1}H and ^{13}C NMR Spectroscopy: To confirm the structure of the 3-picoline.
  - ^{1}H NMR ($CDCl_3$): δ ~8.4 (m, 2H), 7.5 (m, 1H), 7.2 (m, 1H), 2.3 (s, 3H).
  - ^{13}C NMR ($CDCl_3$): δ ~149.5, 147.0, 137.5, 133.0, 123.0, 18.0.
- FTIR Spectroscopy: To identify characteristic functional group vibrations.

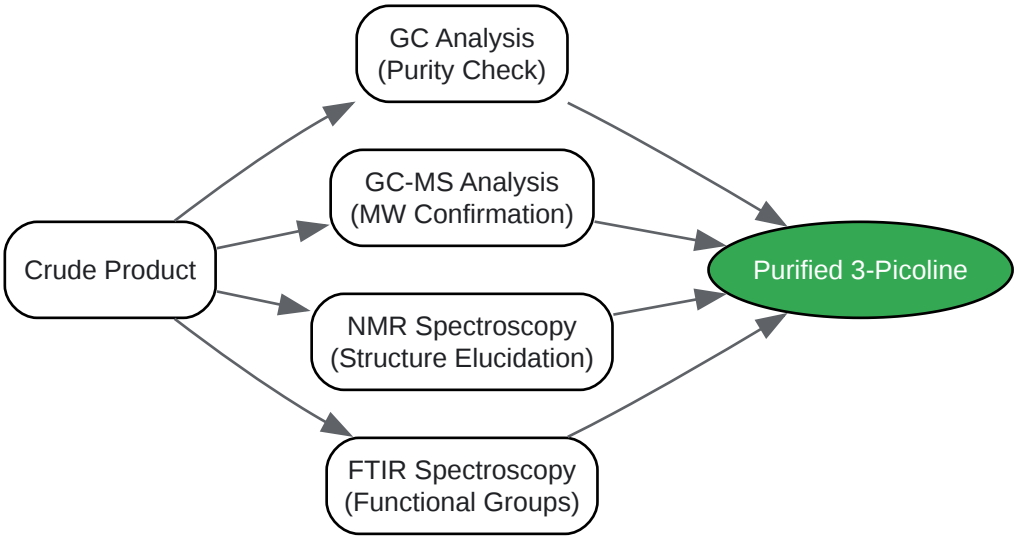

Click to download full resolution via product page

Caption: Logical workflow for the characterization of 3-picoline.

References

- Unsaturated aldehydes: a novel route for the synthesis of pyridine and 3-picoline. RSC Publishing.

© 2026 BenchChem. All rights reserved.

- Unsaturated aldehydes: a novel route for the synthesis of pyridine and 3-picoline. RSC Advances.
- Synthesis of Pyridine and 3-Picoline from Acrolein Diethyl Acetal and Ammonia over La- and KF-modified Y Type Zeolite C
- Unsaturated Aldehydes: A Novel Route for the Synthesis of Pyridine and 3-picoline | Request PDF.
- Process for the preparation of 3-picoline.
- Process for the selective preparation of 3-picoline from acrolein and one or more ammonium salts dissolved in water.
- Process for the selective preparation of 3-methylpyridine (3-picoline) from acrolein and one or more ammonium salts dissolved in water.
- The Synthesis of Pyridine and 3-picoline from Gas-phase Acrolein Diethyl Acetal with Ammonia over ZnO/HZSM-5 | Request PDF.
- Method for preparing 3-methylpyridine by utilizing acrolein.
- Synthesis of 3-picoline from acrolein and ammonia through a liquid-phase reaction pathway using SO42−/ZrO2-FeZSM-5 as catalyst | Request PDF.
- Synthesis of 3-picoline from acrolein dimethyl acetal and ammonia over NH4F-HF treated ZSM-5.
- Preparation of pyridine and 3-picoline from acrolein and ammonia with HF/MgZSM-5 catalyst | Request PDF.
- Process for the selective preparation of 3-methylpyridine (3-picoline) from acrolein and one or more ammonium salts dissolved in water.

Need Custom Synthesis?

BenchChem offers custom synthesis for rare earth carbides and specific isotopiclabeling.

Email: info@benchchem.com or Request Quote Online.

Sources

- 1. Unsaturated aldehydes: a novel route for the synthesis of pyridine and 3-picoline - RSC Advances (RSC Publishing) DOI:10.1039/C4RA17098A [pubs.rsc.org]
- 2. researchgate.net [researchgate.net]
- 3. researchgate.net [researchgate.net]
- 4. Unsaturated aldehydes: a novel route for the synthesis of pyridine and 3-picoline - RSC Advances (RSC Publishing) [pubs.rsc.org]

- 5. Synthesis of Pyridine and 3-Picoline from Acrolein Diethyl Acetal and Ammonia over La- and KF-modified Y Type Zeolite Catalysts [yyhx.ciac.jl.cn]
- 6. researchgate.net [researchgate.net]
- 7. researchgate.net [researchgate.net]
- 8. CN102471268A - Process for the selective preparation of 3-picoline from acrolein and one or more ammonium salts dissolved in water - Google Patents [patents.google.com]
- 9. CN102249989A - Method for preparing 3-methylpyridine by utilizing acrolein - Google Patents [patents.google.com]

- To cite this document: BenchChem. [Application Notes and Protocols for the Synthesis of 3-Picoline]. BenchChem, [2026]. [Online PDF]. Available at: [https://www.benchchem.com/product/b014957/docs#application-notes-and-protocols-for-the-synthesis-of-3-picoline]

Disclaimer & Data Validity:

The information provided in this document is for Research Use Only (RUO) and is strictly not intended for diagnostic or therapeutic procedures. While BenchChem strives to provide accurate protocols, we make no warranties, express or implied, regarding the fitness of this product for every specific experimental setup.

Technical Support: The protocols provided are for reference purposes. Unsure if this reagent suits your experiment?

Need Industrial/Bulk Grade? Request Custom Synthesis Quote

BenchChem

Our mission is to be the trusted global source of essential and advanced chemicals, empowering scientists and researchers to drive progress in science and industry.

Contact

Address: 3281 E Guasti Rd

Ontario, CA 91761, United States

Phone: (601) 213-4426

Email: info@benchchem.com

Contact our Ph.D. Support Team for a compatibility check

© 2026 BenchChem. All rights reserved.