Technical Support Center: Managing the Moisture Sensitivity of Sulfonyl Chlorides

Author: BenchChem Technical Support Team. **Date**: May 2026

Compound of Interest

Compound Name:	*5-methyl-1H-pyrazole-4-sulfonyl chloride*
CAS No.:	*1179918-36-5*
Cat. No.:	*B1392833*

Get Quote

Welcome to the technical support center for handling and utilizing sulfonyl chlorides. This guide is designed for researchers, medicinal chemists, and process development scientists who work with these versatile but highly reactive reagents. As a Senior Application Scientist, my goal is to provide you with not just protocols, but the underlying principles and field-tested insights to help you anticipate challenges, troubleshoot effectively, and ensure the integrity of your experiments.

Foundational Understanding: The Root of the Problem

Q: Why are sulfonyl chlorides so acutely sensitive to moisture?

A: The high reactivity of sulfonyl chlorides stems from the electron-deficient nature of the sulfur atom. The sulfur is bonded to two highly electronegative oxygen atoms and a chlorine atom, which strongly pull electron density away from the sulfur center. This makes the sulfur atom highly electrophilic and an attractive target for nucleophiles.

© 2026 BenchChem. All rights reserved.

Water, although a weak nucleophile, is typically present in sufficient excess (e.g., from atmospheric humidity or in non-anhydrous solvents) to readily attack the electrophilic sulfur atom. This reaction, known as hydrolysis, results in the formation of the corresponding sulfonic acid and hydrochloric acid (HCl).[1] This process is often irreversible and detrimental to the desired reaction.

The mechanism is generally considered a bimolecular nucleophilic substitution (SN2-type) process at the sulfur atom.[2][3]

Below is a diagram illustrating the hydrolysis pathway.

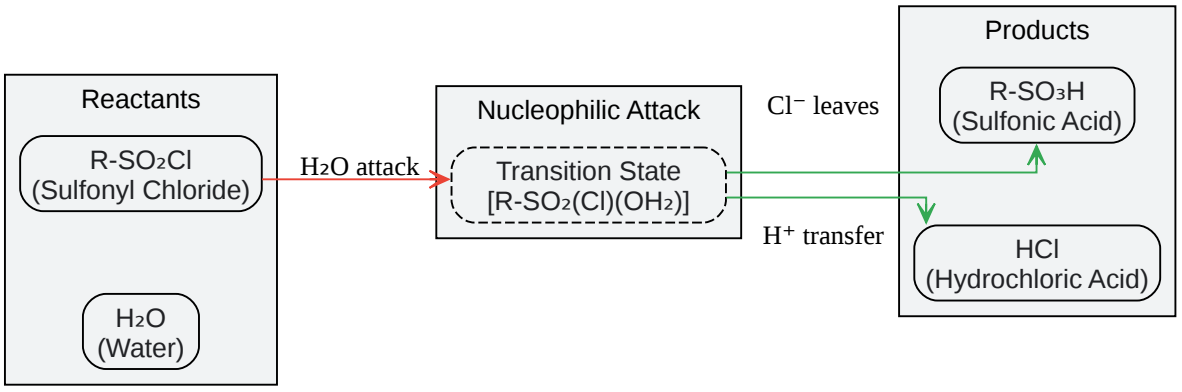

Click to download full resolution via product page

Caption: Mechanism of sulfonyl chloride hydrolysis.

This degradation pathway not only consumes the starting material, reducing yield, but the generation of corrosive HCl can also lead to side reactions with other functional groups in the molecule or damage equipment.[1]

Troubleshooting Guide: Common Experimental Issues

© 2026 BenchChem. All rights reserved.

This section addresses the most frequent problems encountered during reactions involving sulfonyl chlorides.

Q: My reaction yield is significantly lower than expected. How can I determine if hydrolysis of the sulfonyl chloride is the culprit?

A: Low yield is the most common symptom of premature sulfonyl chloride degradation. To diagnose the issue, a combination of analytical monitoring and control experiments is recommended.

Analytical Confirmation:

- Thin-Layer Chromatography (TLC): Compare the TLC of your reaction mixture to a sample of your starting sulfonyl chloride. The hydrolysis product, sulfonic acid, is highly polar and will typically appear as a baseline spot that does not move from the origin in common non-polar solvent systems (e.g., hexanes/ethyl acetate).

- Infrared (IR) Spectroscopy: Check for the appearance of a broad O-H stretch (around 3200-3600 cm^{-1}) in your crude product, which is characteristic of the sulfonic acid. The key S=O and S-Cl stretches of the sulfonyl chloride should diminish.[4]

- Nuclear Magnetic Resonance (NMR) Spectroscopy: ^{1}H NMR can be very informative. Protons adjacent to the sulfonyl group will experience a chemical shift change upon hydrolysis. The appearance of a new, often broad, peak corresponding to the acidic proton of the sulfonic acid can also be an indicator, though it may exchange with residual water.

© 2026 BenchChem. All rights reserved.

Compound Type	Functional Group	Characteristic IR Absorption (cm^{-1})	^1H NMR Signal (α-protons)
Sulfonyl Chloride	S=O (asymmetric)	~1375-1350	Typically downfield shift
	S=O (symmetric)	~1180-1160	
	S-Cl	~600-500	
Sulfonic Acid	O-H (stretch)	~3600-3200 (broad)	Shifted relative to sulfonyl chloride
	S=O (asymmetric)	~1250-1160	
	S=O (symmetric)	~1060-1030	

Table 1: Comparative Spectroscopic Data for Diagnosis.[4]

Q: I've confirmed hydrolysis is occurring. What are the most likely sources of moisture in my experiment?

A: Moisture can be introduced from several sources. A systematic check is crucial for identifying the weak point in your experimental setup.

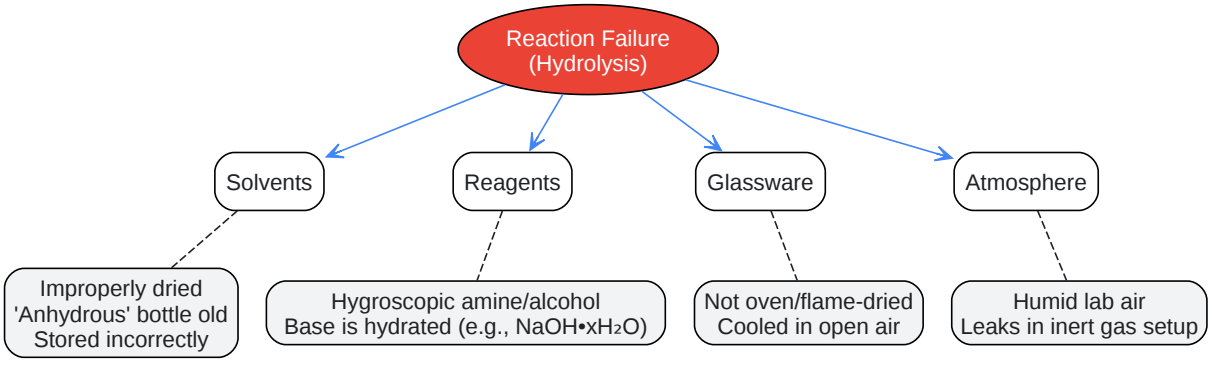

© 2026 BenchChem. All rights reserved.

Click to download full resolution via product page

Caption: Common sources of moisture contamination.

FAQs: Best Practices for Prevention

Q: What is the correct way to store and handle sulfonyl chlorides?

A: Proper storage is the first line of defense.

- Containers: Always store sulfonyl chlorides in their original, tightly sealed containers. For long-term storage, consider using a desiccator or sealing the container with paraffin film.[1][5]
- Atmosphere: Store under an inert atmosphere (nitrogen or argon).[1] For frequently used reagents, a positive pressure of inert gas in the headspace is ideal.
- Temperature: Store in a cool, dry, and well-ventilated area, away from incompatible materials like water, bases, and alcohols.[6] Some sulfonyl chlorides may require refrigeration, but always check the manufacturer's recommendation to avoid freezing.[7]

Q: How should I prepare my solvents for a reaction with a sulfonyl chloride?

A: Never assume a solvent from a bottle labeled "anhydrous" is perfectly dry, especially if it has been opened previously.

- Drying Agents: Use an appropriate drying agent compatible with your solvent. Molecular sieves (3Å or 4Å) are excellent for many common solvents like dichloromethane, THF, and acetonitrile. For ultimate dryness, more reactive agents like calcium hydride can be used, but require careful handling.[8][9][10]
- Solvent Purification Systems: If available, a solvent purification system (e.g., a Grubbs-type system) that passes solvents through columns of activated alumina is the gold standard for obtaining ultra-dry solvents.

© 2026 BenchChem. All rights reserved.

Drying Agent	Suitable Solvents	Capacity	Speed	Comments
Anhydrous $MgSO_4$	Ethers, Esters, Halogenated Solvents	High	Fast	Slightly acidic; good for general purpose drying.
Anhydrous Na_2SO_4	Most organic solvents	High	Slow	Neutral, but less efficient than $MgSO_4$.
Molecular Sieves (4Å)	Most organic solvents	Moderate	Moderate	Excellent for pre-drying or storing solvents. Must be activated.
Calcium Hydride (CaH_2)	Ethers, Hydrocarbons, some Esters	High	Moderate	Reacts to form H_2 gas; use with caution. Excellent for achieving very low water content.[8][9]
Phosphorus Pentoxide (P_4O_{10})	Hydrocarbons, Halogenated Solvents	Very High	Very Fast	Highly efficient but forms a polymeric layer that can impede further drying. Very corrosive.[8][9]

Table 2: Common Drying Agents for Organic Solvents.[8][9][10][11][12]

Q: Can you provide a standard protocol for setting up a reaction under anhydrous conditions?

A: Absolutely. This protocol outlines a robust method for running reactions with moisture-sensitive reagents using standard laboratory equipment.[13][14]

© 2026 BenchChem. All rights reserved.

Protocol: Anhydrous Reaction Setup

- Glassware Preparation:
  - Place the reaction flask (round-bottom flask), magnetic stir bar, and condenser in an oven at >120 °C for at least 4 hours (overnight is best).
  - Alternatively, flame-dry the assembled apparatus under a vacuum.
- Assembly and Inerting:
  - While still hot, remove the glassware from the oven (using thick gloves) and immediately assemble it. Clamp the flask securely.
  - Fold a rubber septum over the joint(s).
  - Immediately begin flushing the system with a dry, inert gas like nitrogen or argon. A common method is to use a balloon filled with the gas attached to a needle that pierces the septum.[13]
  - Insert a second "exit" needle to allow the air inside the flask to be displaced. Let the system flush for at least 5-10 minutes.
- Cooling:
  - Remove the exit needle and allow the glassware to cool to room temperature under a positive pressure of the inert gas (the balloon will remain inflated).
- Reagent Addition:
  - Add dry solvents and liquid reagents via a dry syringe. Flush the syringe with inert gas before drawing up the liquid.
  - Add solid reagents quickly by briefly removing the septum and adding the solid against a counter-flow of inert gas. For highly sensitive solids, use a solid addition funnel.
- Running the Reaction:

© 2026 BenchChem. All rights reserved.

- Maintain a positive pressure of inert gas throughout the entire reaction, especially if heating or cooling. The balloon serves as a simple and effective pressure regulator.

Caption: Workflow for setting up an anhydrous reaction.

By rigorously excluding moisture at every step, you create a self-validating system where the successful formation of your desired product confirms the integrity of your technique.

References

- HoriazonChemical. (n.d.). Hydrolysis of Methanesulfonyl Chloride: Causes, Mechanism, and Prevention. HoriazonChemical.
- King, J. F., & Loosmore, S. M. (1992). Mechanisms of Hydrolysis and Related Nucleophilic Displacement Reactions of Alkanesulfonyl Chlorides. Journal of the American Chemical Society, 114(5), 1743–1749.
- Rogne, O. (1970). Kinetics of the neutral and alkaline hydrolysis of aromatic sulphonyl chlorides in water. Journal of the Chemical Society B: Physical Organic, 1056-1058.
- UCL Discovery. (n.d.). The Synthesis of Functionalised Sulfonamides.
- MilliporeSigma. (n.d.). Safety First: Handling Sulfuryl Chloride in Industrial Settings.
- European Journal of Chemistry. (2024).
- Benchchem. (n.d.). Avoiding impurities in the synthesis of sulfonyl chlorides.
- King, J. F., & Hillhouse, J. H. (1989). The mechanism of hydrolysis of 2-hydroxyethanesulfonyl chloride: the intermediacy of 1,2-oxathietane 2,2-dioxide (β-sultone). Canadian Journal of Chemistry, 67(12), 2162-2172.
- Wang, Z., et al. (2006). An Expedient Synthesis of Sulfinamides from Sulfonyl Chlorides. Tetrahedron Letters, 47(32), 5677-5680.
- S D Fine-Chem Limited. (n.d.). Sulphuryl Chloride MSDS.
- Gnedin, B. G., Ivanov, S. N., & Shchukina, M. V. (1988). Kinetics and mechanism of hydrolysis of aromatic sulfonyl chlorides in aqueous sulfuric acid solutions. Journal of Organic Chemistry of the USSR, 24(4), 744-749.
- Sciencemadness Wiki. (2023). Sulfuryl chloride.
- BenchChem. (2025).
- Organic Chemistry Portal. (n.d.).
- Sigma-Aldrich. (n.d.).
- Fisher Scientific. (2025). Sulfuryl chloride SDS.
- University of California, Los Angeles. (n.d.). Drying Agents.
- NINGBO INNO PHARMCHEM CO.,LTD. (n.d.).
- Delloyd's Lab-Tech. (n.d.). Solvent drying and drying agents.
- Sigma-Aldrich. (2024).

© 2026 BenchChem. All rights reserved.

- Sciencemadness Wiki. (2023). Drying solvents.
- Organic Chemistry with Victor. (2023, November 18). Sulfonate Esters: Activation of Alcohols with Sulfonyl Chlorides [Video]. YouTube.
- Chemistry LibreTexts. (2024). 3.2: Drying Agents.
- Chemistry LibreTexts. (2022). 1.
- Molecular Inorganic Chemistry, Leiden University. (2008). Working with air and moisture sensitive compounds.

Need Custom Synthesis?

BenchChem offers custom synthesis for rare earth carbides and specific isotopiclabeling.

Email: info@benchchem.com or Request Quote Online.

Sources

- 1. Hydrolysis of Methanesulfonyl Chloride: Causes, Mechanism, and Prevention – HoriazonChemical [horiazonchemical.com]
- 2. Kinetics of the neutral and alkaline hydrolysis of aromatic sulphonyl chlorides in water - Journal of the Chemical Society B: Physical Organic (RSC Publishing) [pubs.rsc.org]
- 3. researchgate.net [researchgate.net]
- 4. benchchem.com [benchchem.com]
- 5. Sulfuryl chloride - Sciencemadness Wiki [sciencemadness.org]
- 6. nbinno.com [nbinno.com]
- 7. sigmaaldrich.com [sigmaaldrich.com]
- 8. Drying Agents - Removing water from organic solvents [dhanlaldelloyd.tripod.com]
- 9. Drying solvents and Drying agents [delloyd.50megs.com]
- 10. Drying solvents - Sciencemadness Wiki [sciencemadness.org]
- 11. 内容不提供 [sigmaaldrich.com]
- 12. chem.libretexts.org [chem.libretexts.org]
- 13. chem.libretexts.org [chem.libretexts.org]
- 14. molan.wdfiles.com [molan.wdfiles.com]

© 2026 BenchChem. All rights reserved.

- To cite this document: BenchChem. [Technical Support Center: Managing the Moisture Sensitivity of Sulfonyl Chlorides]. BenchChem, [2026]. [Online PDF]. Available at: [https://www.benchchem.com/product/b1392833/docs#technical-support-center-managing-the-moisture-sensitivity-of-sulfonyl-chlorides]

Disclaimer & Data Validity:

The information provided in this document is for Research Use Only (RUO) and is strictly not intended for diagnostic or therapeutic procedures. While BenchChem strives to provide accurate protocols, we make no warranties, express or implied, regarding the fitness of this product for every specific experimental setup.

Technical Support: The protocols provided are for reference purposes. Unsure if this reagent suits your experiment?

Need Industrial/Bulk Grade? Request Custom Synthesis Quote

BenchChem

Our mission is to be the trusted global source of essential and advanced chemicals, empowering scientists and researchers to drive progress in science and industry.

Contact

Address: 3281 E Guasti Rd

Ontario, CA 91761, United States

Phone: (601) 213-4426

Email: info@benchchem.com

Contact our Ph.D. Support Team for a compatibility check

© 2026 BenchChem. All rights reserved.