A Comparative Study: Trityl Hydroperoxide vs. m-CPBA in Organic Synthesis

Author: BenchChem Technical Support Team. **Date**: April 2026

Compound of Interest

Compound Name:	*Trityl hydroperoxide*
CAS No.:	*4198-93-0*
Cat. No.:	*B13897363*

Get Quote

For Researchers, Scientists, and Drug Development Professionals: An Objective Comparison of Two Key Oxidizing Agents

In the realm of synthetic organic chemistry, the choice of an oxidizing agent is paramount to the success of a reaction, influencing yield, selectivity, and safety. Among the plethora of available reagents, meta-chloroperoxybenzoic acid (m-CPBA) has long been a workhorse for various oxidation reactions. However, the search for alternative reagents with improved stability, selectivity, and safety profiles is a continuous endeavor. This guide provides a comparative analysis of **Trityl hydroperoxide** and m-CPBA, offering insights into their respective performance, supported by available data and detailed experimental protocols.

At a Glance: Key Properties and Performance

© 2026 BenchChem. All rights reserved.

Property	Trityl Hydroperoxide	m-Chloroperoxybenzoic Acid (m-CPBA)
Chemical Formula	$C_{19}H_{16}O_2$	$C_7H_5ClO_3$
Molecular Weight	276.33 g/mol	172.57 g/mol
Appearance	Colorless, crystalline solid[1]	White crystalline powder[2]
Common Applications	Oxidation of alcohols, amines, and as a catalyst in various reactions[1]	Epoxidation of alkenes, Baeyer-Villiger oxidation of ketones, oxidation of sulfides and amines[2][3]
Solubility	Soluble in organic solvents[1]	Soluble in CH_2Cl_2, $CHCl_3$, 1,2-dichloroethane, ethyl acetate, benzene, and ether; moderately soluble in hexane; insoluble in water[2]
Stability	Considered a thermally robust hydroperoxide	Commercially available as a more stable mixture (typically <72% purity) with m-chlorobenzoic acid and water to mitigate its explosive potential in pure form.[4]
Safety	Can be hazardous and potentially explosive under certain conditions[1]	Strong oxidizing agent that can cause fire on contact with flammable materials; pure form can be detonated by shock or sparks.[4]

Performance in Key Oxidation Reactions

Direct comparative studies between **Trityl hydroperoxide** and m-CPBA under identical conditions are not extensively reported in the literature. The following tables summarize typical performance data for each reagent in common oxidation reactions based on available experimental results.

© 2026 BenchChem. All rights reserved.

Epoxidation of Alkenes

Reagent	Substrate	Product	Yield (%)	Selectivity	Reference
m-CPBA	Cyclohexene	Cyclohexene oxide	>95	High	General knowledge
m-CPBA	Styrene	Styrene oxide	~80-90	High	General knowledge
Trityl hydroperoxide	Data not readily available in direct comparison	-	-	-	-

Note: While specific data for **Trityl hydroperoxide** in simple epoxidations is limited in comparative literature, it is often employed in metal-catalyzed epoxidation reactions where the metal center is the active oxidant.

Baeyer-Villiger Oxidation of Ketones

© 2026 BenchChem. All rights reserved.

Reagent	Substrate	Product	Yield (%)	Migratory Aptitude	Reference
m-CPBA	Cyclohexanone	ε-Caprolactone	High	Follows established migratory aptitude (tert-alkyl > sec-alkyl > aryl > prim-alkyl > methyl)	--INVALID-LINK--
m-CPBA	Acetophenone	Phenyl acetate	Moderate to High	Phenyl > Methyl	General knowledge
Trityl hydroperoxide	Data not readily available in direct comparison	-	-	-	-

Oxidation of Sulfides

© 2026 BenchChem. All rights reserved.

Reagent	Substrate	Product	Yield (%)	Conditions	Reference
m-CPBA	Thioanisole	Methyl phenyl sulfoxide	High	1.2 eq. m-CPBA, THF, 0°C	[Der Pharma Chemica, 2016, 8(18):419-423]
m-CPBA	Thioanisole	Methyl phenyl sulfone	High	>2 eq. m-CPBA, THF, 35°C	[Der Pharma Chemica, 2016, 8(18):419-423]
Trityl hydroperoxide	Aryl trityl sulfides	Benzophenone, phenol, benzenesulfonic acid	Variable	H_2O_2, acidic media	[Journal of Organic Chemistry, 1960, 25(4), 535-538]

Note: The oxidation of aryl trityl sulfides with hydrogen peroxide (a precursor to **Trityl hydroperoxide**) in acidic media can lead to cleavage of the trityl group, indicating a different reaction pathway compared to m-CPBA.

Experimental Protocols

Epoxidation of Styrene using m-CPBA

Materials:

- Styrene
- m-Chloroperoxybenzoic acid (m-CPBA, ~77% purity)
- Dichloromethane (CH_2Cl_2)
- Saturated aqueous sodium bicarbonate solution
- Saturated aqueous sodium sulfite solution

© 2026 BenchChem. All rights reserved.

- Anhydrous magnesium sulfate
- Round-bottom flask, magnetic stirrer, ice bath, separatory funnel, rotary evaporator

Procedure:

- Dissolve styrene (1.0 eq) in dichloromethane in a round-bottom flask equipped with a magnetic stirrer.
- Cool the solution to 0 °C in an ice bath.
- Add m-CPBA (1.1 eq) portion-wise to the stirred solution over 10-15 minutes, maintaining the temperature at 0 °C.
- Allow the reaction mixture to stir at 0 °C for 1 hour, then warm to room temperature and stir for an additional 2-4 hours. Monitor the reaction progress by thin-layer chromatography (TLC).
- Upon completion, quench the reaction by adding saturated aqueous sodium sulfite solution to reduce excess peroxide.
- Wash the organic layer with saturated aqueous sodium bicarbonate solution to remove m-chlorobenzoic acid, followed by washing with brine.
- Dry the organic layer over anhydrous magnesium sulfate, filter, and concentrate under reduced pressure to afford the crude styrene oxide.
- Purify the product by flash column chromatography if necessary.

General Protocol for Oxidation using **Trityl Hydroperoxide**

Direct, detailed protocols for the use of **Trityl hydroperoxide** in epoxidation or Baeyer-Villiger reactions are not as commonly reported as for m-CPBA. It is often used in conjunction with a metal catalyst.

General Considerations:

© 2026 BenchChem. All rights reserved.

- **Trityl hydroperoxide** is typically used in stoichiometric amounts or as a co-oxidant in catalytic systems.
- The reaction is often carried out in a non-polar aprotic solvent such as dichloromethane or toluene.
- A metal catalyst (e.g., a vanadium, molybdenum, or titanium complex) is frequently required to activate the hydroperoxide for efficient oxygen transfer.
- Reaction temperatures can range from room temperature to elevated temperatures depending on the substrate and catalyst used.
- Workup procedures generally involve quenching of excess peroxide with a reducing agent (e.g., sodium sulfite) and standard extractive procedures.

Reaction Mechanisms and Visualizations

m-CPBA Epoxidation: The "Butterfly" Mechanism

The epoxidation of an alkene with m-CPBA is a concerted reaction that proceeds through a characteristic five-membered ring transition state, often referred to as the "butterfly" mechanism.

© 2026 BenchChem. All rights reserved.

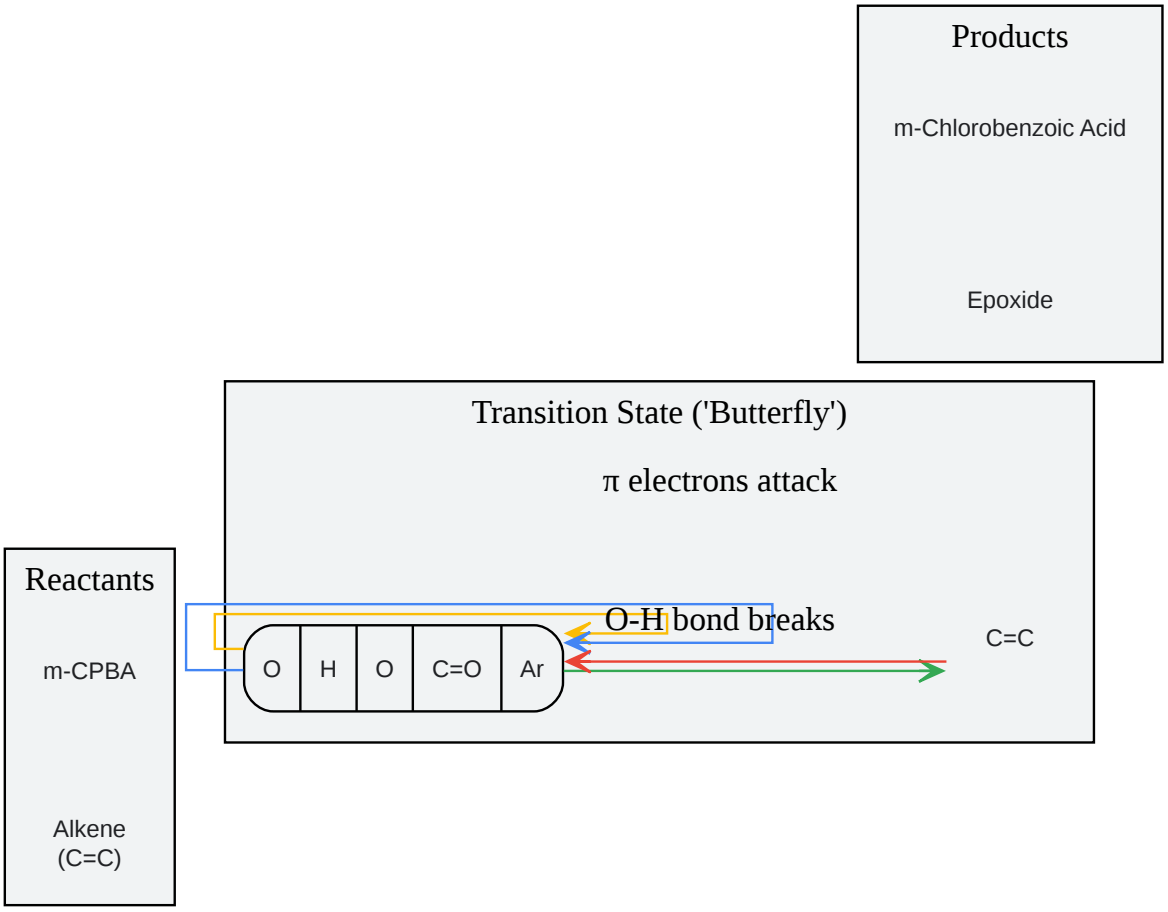

Click to download full resolution via product page

Caption: Concerted "butterfly" mechanism for m-CPBA epoxidation.

Baeyer-Villiger Oxidation with m-CPBA: The Criegee Intermediate

The Baeyer-Villiger oxidation of a ketone with m-CPBA involves the formation of a tetrahedral intermediate known as the Criegee intermediate, followed by a concerted rearrangement.

© 2026 BenchChem. All rights reserved.

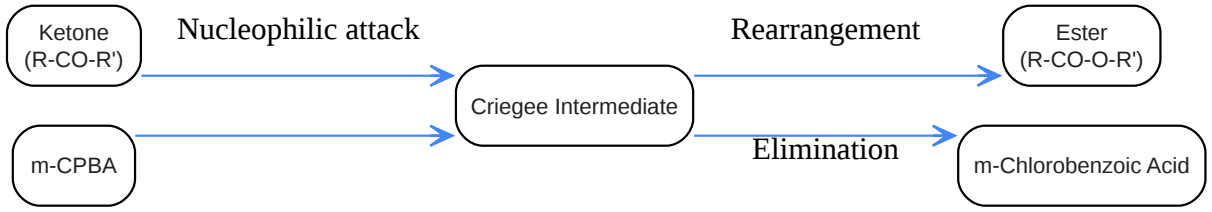

Click to download full resolution via product page

Caption: Key steps in the Baeyer-Villiger oxidation mechanism.

Trityl Hydroperoxide Oxidation Workflow

The mechanism of oxidation by **Trityl hydroperoxide** can vary, often involving metal catalysis. A general workflow is depicted below, highlighting the role of a metal catalyst in activating the hydroperoxide.

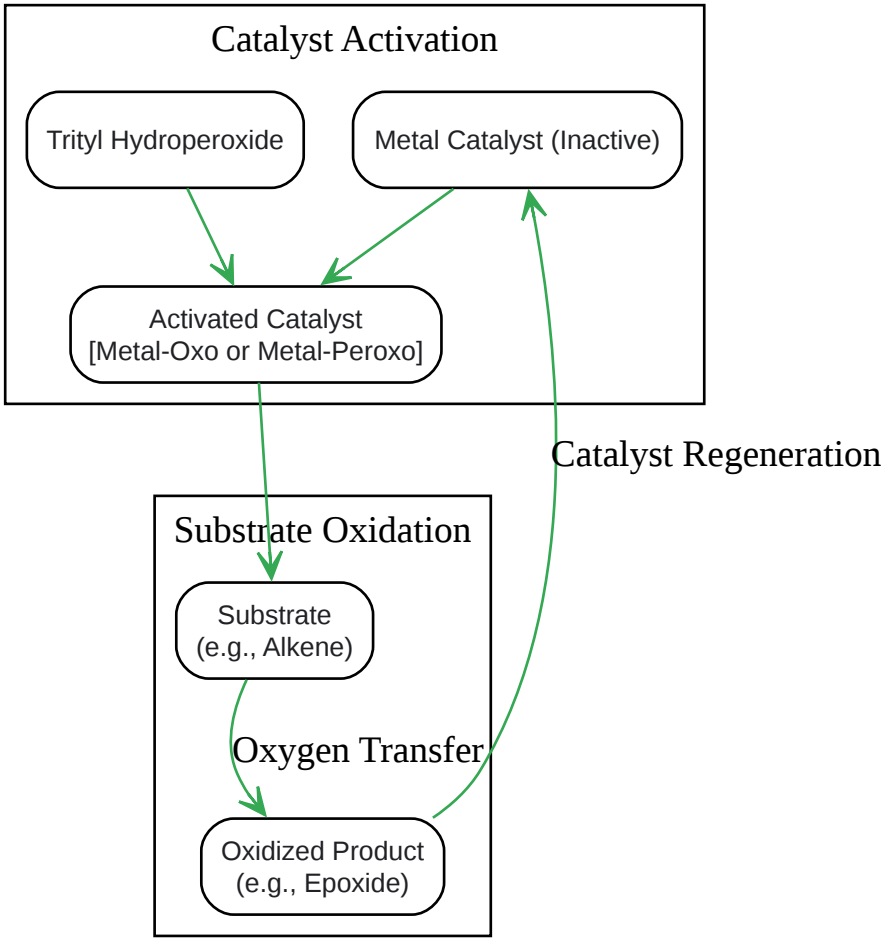

© 2026 BenchChem. All rights reserved.

Click to download full resolution via product page

Caption: General workflow for metal-catalyzed oxidation using **Trityl hydroperoxide**.

Conclusion

Both **Trityl hydroperoxide** and m-CPBA are valuable oxidizing agents in organic synthesis, each with its distinct characteristics.

m-CPBA is a well-established and versatile reagent with a broad range of applications and well-understood reaction mechanisms. Its primary drawback is its potential instability and the generation of a stoichiometric amount of chlorinated benzoic acid as a byproduct.

Trityl hydroperoxide offers the advantage of being a more thermally stable, solid hydroperoxide. Its application often requires the use of a catalyst, which can offer opportunities for developing highly selective and even asymmetric transformations. However, there is a need for more direct comparative studies to fully elucidate its performance relative to established reagents like m-CPBA across a wider range of substrates and reaction types.

For researchers and drug development professionals, the choice between these two reagents will depend on the specific requirements of the synthesis, including substrate compatibility, desired selectivity, scalability, and safety considerations. While m-CPBA remains a reliable choice for many standard oxidations, the potential for catalytic and selective oxidations makes **Trityl hydroperoxide** an intriguing alternative worthy of further investigation and development.

Need Custom Synthesis?

BenchChem offers custom synthesis for rare earth carbides and specific isotopiclabeling.

Email: info@benchchem.com or Request Quote Online.

References

- 1. graphviz.org [graphviz.org]
- 2. medium.com [medium.com]
- 3. DOT Language | Graphviz [graphviz.org]

- 4. Baeyer-Villiger Oxidation [organic-chemistry.org]
- To cite this document: BenchChem. [A Comparative Study: Trityl Hydroperoxide vs. m-CPBA in Organic Synthesis]. BenchChem, [2026]. [Online PDF]. Available at: [https://www.benchchem.com/product/b13897363/docs#a-comparative-study-trityl-hydroperoxide-vs-m-cpba-in-organic-synthesis]

Disclaimer & Data Validity:

The information provided in this document is for Research Use Only (RUO) and is strictly not intended for diagnostic or therapeutic procedures. While BenchChem strives to provide accurate protocols, we make no warranties, express or implied, regarding the fitness of this product for every specific experimental setup.

Technical Support: The protocols provided are for reference purposes. Unsure if this reagent suits your experiment?

Need Industrial/Bulk Grade? Request Custom Synthesis Quote

BenchChem

Our mission is to be the trusted global source of essential and advanced chemicals, empowering scientists and researchers to drive progress in science and industry.

Contact

Address: 3281 E Guasti Rd

Ontario, CA 91761, United States

Phone: (601) 213-4426

Email: info@benchchem.com

Contact our Ph.D. Support Team for a compatibility check

© 2026 BenchChem. All rights reserved.