Comparative Guide: Mass Spectrometry Fragmentation of Nitropyridinyl-Aminobenzonitriles

Author: BenchChem Technical Support Team. **Date**: May 2026

Compound of Interest

Compound Name:	*3-[(3-Nitropyridin-2-yl)amino]benzonitrile*
CAS No.:	*61963-70-0*
Cat. No.:	*B13889482*

Get Quote

Executive Summary

Nitropyridinyl-aminobenzonitriles represent a critical scaffold in the development of Non-Nucleoside Reverse Transcriptase Inhibitors (NNRTIs) for HIV-1 therapy. Structurally related to second-generation NNRTIs like Rilpivirine, these compounds often appear as synthetic intermediates or oxidative metabolites.

This guide provides an in-depth technical comparison of the mass spectral behavior of these moieties. Unlike standard spectral libraries which offer static snapshots, this document analyzes the causality of fragmentation, specifically contrasting the "Ortho Effect" driven pathways in Electrospray Ionization (ESI) against the radical-induced cleavages seen in Electron Ionization (EI).

Chemical Framework & Ionization Physics

© 2026 BenchChem. All rights reserved.

To understand the fragmentation, we must first establish the competitive ionization sites within the scaffold.

- The Scaffold: A pyridine ring substituted with a nitro (

) group, linked via a secondary amine (

) bridge to a benzonitrile ring.
- Protonation Sites (ESI+): The pyridine nitrogen is the most basic site (

  ), making it the primary charge carrier. The nitrile nitrogen is significantly less basic (

).
- Charge Localization: In ESI, the protonated molecular ion

  is an even-electron species. Fragmentation is driven by charge migration to stabilize the resulting daughter ions.[1]

Comparative Analysis: ESI-MS/MS vs. EI-MS

The choice of ionization technique radically alters the observed fragmentation landscape.[2]

Table 1: Ionization Technique Comparison

Feature	Electrospray Ionization (ESI-MS/MS)	Electron Ionization (EI-MS)
Energy Regime	Soft Ionization (Thermal/Voltage driven)	Hard Ionization (70 eV electrons)
Precursor Ion	Even-electron	Odd-electron Radical Cation
Dominant Mechanism	Charge-Remote Fragmentation & Ortho-Effects	Radical-Site Initiated Cleavage
Nitro Group Behavior	Loss of (17 Da) or (18 Da) via intramolecular H-bonding	Loss of (30 Da) and (46 Da)
Diagnostic Value	High for identifying isomer substitution patterns	High for fingerprinting & library matching

Deep Dive: The "Ortho Effect" Mechanism

Critical Insight for Structural Elucidation: When the nitro group is located ortho to the amine bridge on the pyridine ring, a unique rearrangement occurs in ESI(+) mode. This is the most reliable diagnostic marker for distinguishing positional isomers.

The Mechanism[2][4][5]

- Protonation: The pyridine nitrogen accepts a proton.
- Cyclization: The oxygen of the nitro group interacts with the hydrogen on the bridging amine.
- Elimination: This 6-membered transition state facilitates the loss of a hydroxyl radical (, 17 Da) or water (, 18 Da), resulting in a stabilized cyclic product ion.

© 2026 BenchChem. All rights reserved.

Note: Para- or meta-substituted nitro isomers cannot form this transition state and instead predominantly lose the entire nitro group (

, 46 Da).

Visualization of Fragmentation Pathways[4][6][7]

The following diagram illustrates the competitive fragmentation pathways for a representative 3-nitro-2-aminopyridine derivative.

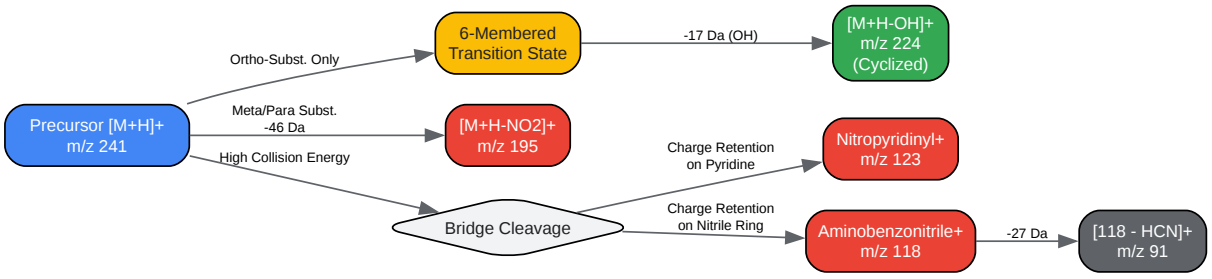

Click to download full resolution via product page

Caption: Figure 1. Competitive fragmentation pathways showing the diagnostic Ortho-Effect vs. standard cleavage.

Experimental Protocol (Self-Validating)

This protocol is designed to ensure reproducibility and minimize in-source fragmentation, which can obscure the diagnostic ions.

Sample Preparation

- Stock Solution: Dissolve 1 mg of compound in 1 mL DMSO.
- Working Solution: Dilute to 500 ng/mL in 50:50 Acetonitrile:Water (0.1% Formic Acid).
  - Why: Formic acid ensures full protonation of the pyridine ring, maximizing sensitivity in ESI(+).

© 2026 BenchChem. All rights reserved.

LC-MS/MS Conditions

- System: UHPLC coupled to Q-TOF or Triple Quadrupole.
- Column: C18 Reverse Phase (e.g., 2.1 x 50 mm, 1.7 µm).
- Mobile Phase:
  - A: Water + 0.1% Formic Acid.[3][4]
  - B: Acetonitrile + 0.1% Formic Acid.[4]
- Gradient: 5% B to 95% B over 5 minutes.

Mass Spectrometry Parameters

- Source: Electrospray Ionization (ESI) Positive Mode.[5][6]
- Capillary Voltage: 3.5 kV.
- Cone Voltage: 20 V (Keep low to prevent in-source loss of

).
- Collision Energy (CE): Ramp 10–40 eV.
  - Validation Step: At 10 eV, the parent ion

    should be the base peak (>90% intensity). If fragments are observed at 10 eV, reduce Cone Voltage.

Workflow Diagram

© 2026 BenchChem. All rights reserved.

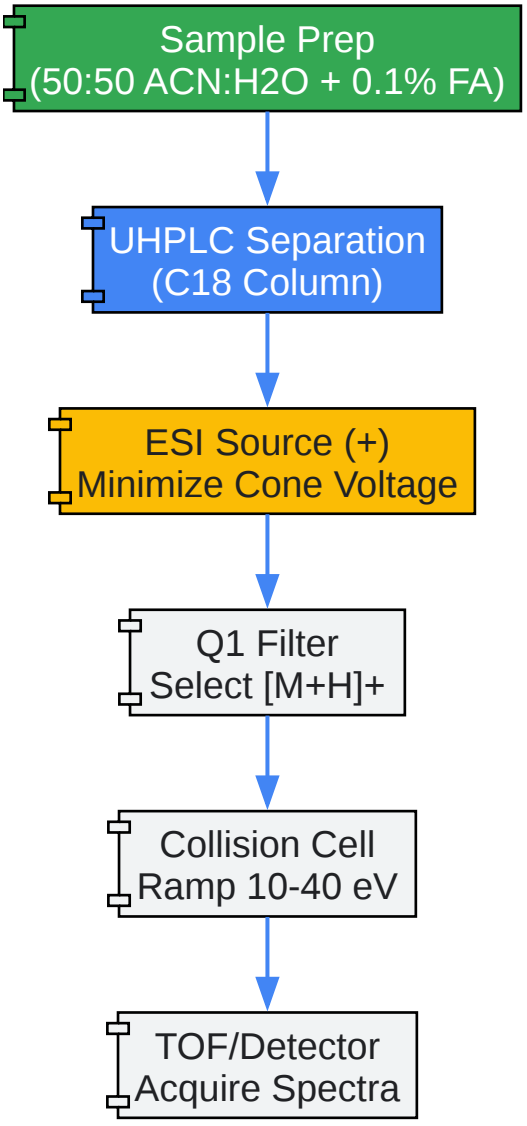

Click to download full resolution via product page

Caption: Figure 2. Optimized LC-MS/MS workflow for analyzing labile nitro-substituted scaffolds.

Reference Data: Characteristic Ions

The following table summarizes the expected ions for a generic Nitropyridinyl-aminobenzonitrile (MW = 240).

© 2026 BenchChem. All rights reserved.

Fragment Description	m/z (Approx)	Origin	Diagnostic Utility
	241	Parent	Molecular Weight confirmation.
	224	Ortho-Effect	Primary Indicator of nitro group adjacent to amine bridge.
	195	Nitro Loss	Indicates nitro group is present but likely not ortho, or CE is too high.
Aminobenzonitrile	118	Bridge Cleavage	Confirms the benzonitrile moiety structure.
	91	Nitrile Loss	Secondary confirmation of the benzonitrile ring.
Nitropyridinyl	123	Bridge Cleavage	Confirms the pyridine substitution pattern.

References

- Holčapek, M., et al. (2010). Structural analysis of nitro compounds by electrospray ionization and atmospheric pressure chemical ionization mass spectrometry. Journal of Mass Spectrometry.[7] Link
- NIST Mass Spectrometry Data Center. (2023). Mass spectrum of 4-Aminobenzonitrile (Electron Ionization). NIST Chemistry WebBook. Link
- Kavetsou, E., et al. (2015). Fragmentation reactions using electrospray ionization mass spectrometry: an important tool for the structural elucidation of synthetic products.[8] Natural Product Reports.[8] Link

© 2026 BenchChem. All rights reserved.

- BenchChem Technical Support. (2025). Spectral Data Analysis of 4-Aminobenzonitrile: A Technical Guide. BenchChem.[9][10] Link
- Rao, R.N., et al. (2016). Characterization of impurities of HIV NNRTI Doravirine by UHPLC-high resolution MS and tandem MS analysis. Journal of Mass Spectrometry.[7] Link

Need Custom Synthesis?

BenchChem offers custom synthesis for rare earth carbides and specific isotopiclabeling.

Email: info@benchchem.com or Request Quote Online.

Sources

- 1. Fragmentation (mass spectrometry) - Wikipedia [en.wikipedia.org]
- 2. Strategies for Mitigating In-Source Fragmentation in NDSRI Analysis using LC-MS - Confirmatory Testing & Analytical Challenges - Nitrosamines Exchange [nitrosamines.usp.org]
- 3. Determination of nucleosidic/tidic reverse transcriptase inhibitors in plasma and cerebrospinal fluid by ultra-high-pressure liquid chromatography coupled with tandem mass spectrometry - PMC [pmc.ncbi.nlm.nih.gov]
- 4. Design and Synthesis of Novel HIV-1 NNRTIs with Bicyclic Cores and with Improved Physicochemical Properties - PMC [pmc.ncbi.nlm.nih.gov]
- 5. mdpi.com [mdpi.com]
- 6. Fragmentation of dipyridamole and related dipyrimidines by electrospray ionization collisional activated decomposition mass spectrometry - PubMed [pubmed.ncbi.nlm.nih.gov]
- 7. Characterization of impurities of HIV NNRTI Doravirine by UHPLC-high resolution MS and tandem MS analysis - PubMed [pubmed.ncbi.nlm.nih.gov]
- 8. Fragmentation reactions using electrospray ionization mass spectrometry: an important tool for the structural elucidation and characterization of synthetic and natural products - PubMed [pubmed.ncbi.nlm.nih.gov]
- 9. pdf.benchchem.com [pdf.benchchem.com]
- 10. pdf.benchchem.com [pdf.benchchem.com]
- To cite this document: BenchChem. [Comparative Guide: Mass Spectrometry Fragmentation of Nitropyridinyl-Aminobenzonitriles]. BenchChem, [2026]. [Online PDF]. Available at:

© 2026 BenchChem. All rights reserved.

[https://www.benchchem.com/product/b13889482/docs#comparative-guide-mass-spectrometry-fragmentation-of-nitropyridinyl-aminobenzonitriles]

Disclaimer & Data Validity:

The information provided in this document is for Research Use Only (RUO) and is strictly not intended for diagnostic or therapeutic procedures. While BenchChem strives to provide accurate protocols, we make no warranties, express or implied, regarding the fitness of this product for every specific experimental setup.

Technical Support: The protocols provided are for reference purposes. Unsure if this reagent suits your experiment?

Need Industrial/Bulk Grade? Request Custom Synthesis Quote

BenchChem

Our mission is to be the trusted global source of essential and advanced chemicals, empowering scientists and researchers to drive progress in science and industry.

Contact

Address: 3281 E Guasti Rd

Ontario, CA 91761, United States

Phone: (601) 213-4426

Email: info@benchchem.com

Contact our Ph.D. Support Team for a compatibility check

© 2026 BenchChem. All rights reserved.