Technical Support Center: Recrystallization of Phenethyl Chloroacetamides

Author: BenchChem Technical Support Team. **Date**: February 2026

Compound of Interest		
Compound Name:	*2-chloro-N-[2-(4-methylphenyl)ethyl]acetamide*	
CAS No.:	*1170803-77-6*	
Cat. No.:	*B1386989*	*Get Quote*

Subject: Optimization of Solvent Systems & Troubleshooting for

-Phenethyl-2-chloroacetamide Purification Date: October 26, 2023 To: Research Scientists & Process Chemists From: Senior Application Scientist, Purification Division

Introduction

-Phenethyl-2-chloroacetamide and its derivatives are critical electrophilic intermediates, frequently employed in the synthesis of isoquinolines (via Bischler-Napieralski cyclization) and various pharmaceutical heterocycles.

The Challenge: The primary difficulty in recrystallizing these compounds lies in their low melting points (often 45–55°C for the unsubstituted parent) and the amphiphilic nature of the molecule (lipophilic phenethyl tail vs. polar chloroamide head). These factors create a high propensity for "oiling out"—where the product separates as a liquid emulsion rather than a crystalline solid—and susceptibility to hydrolysis under thermal stress.

This guide provides a validated solvent selection matrix, a standard operating procedure (SOP) designed to mitigate oiling out, and a troubleshooting hub for common failure modes.

Module 1: Solvent Selection Matrix

The following matrix correlates impurity profiles with the optimal solvent system.

© 2026 BenchChem. All rights reserved.

Solvent System	Composition (v/v)	Primary Use Case	Risk Profile
Ethyl Acetate / Hexanes	1:3 to 1:5	Standard Purification. Best balance for removing non-polar byproducts (e.g., unreacted phenethylamine).	Low. The non-polar antisolvent (Hexane) drives crystallization effectively without inducing hydrolysis.
Toluene / Heptane	1:2	High-Purity/Scale-up. Excellent for removing trace water and polar impurities.	Medium. Higher boiling point of Toluene (110°C) increases risk of oiling out if not cooled slowly.
Ethanol / Water	Varies	Polar Impurity Removal. Use only if inorganic salts (e.g., amine hydrochlorides) are present.	High. Water at high temperatures can hydrolyze the C-Cl bond. Requires rapid processing.
Dichloromethane (DCM) / Hexane	1:4	Low-Melting Derivatives. For compounds with MP < 50°C.	Low. Low boiling point of DCM prevents overheating the solute.

Decision Logic: Solvent Selection Strategy

© 2026 BenchChem. All rights reserved.

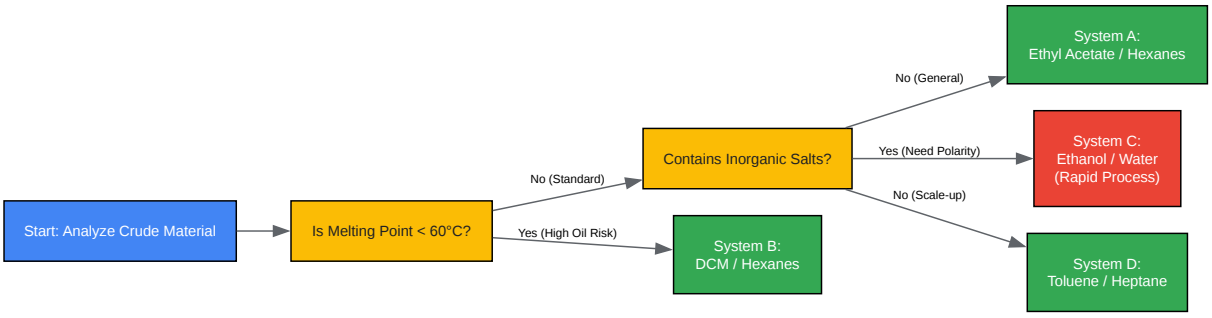

Click to download full resolution via product page

Figure 1: Decision tree for selecting the appropriate solvent system based on thermal properties and impurity profile.

Module 2: Standard Operating Procedure (SOP)

Protocol ID: REC-PCA-001 Method: Two-Solvent Recrystallization (Ethyl Acetate / Hexane) Safety Warning: Chloroacetamides are potent alkylating agents and sensitizers. Wear nitrile gloves and work in a fume hood.

Step-by-Step Methodology

- Dissolution (The "Good" Solvent):
  - Place the crude

    -phenethyl-2-chloroacetamide in an Erlenmeyer flask.
  - Add Ethyl Acetate (EtOAc) dropwise while heating gently on a steam bath or oil bath set to 60°C.
  - Critical Control Point: Use the minimum amount of EtOAc required to dissolve the solid. If the solution is dark, add activated charcoal (1% w/w), stir for 2 minutes, and filter hot through Celite.

© 2026 BenchChem. All rights reserved.

- Antisolvent Addition:
  - Remove the flask from the heat source.[1]
  - While the solution is still warm (but not boiling), slowly add Hexanes (or Heptane) dropwise.
  - Swirl continuously. Stop adding Hexanes the moment a faint, persistent turbidity (cloudiness) appears.
- Clearing the Solution:
  - Add 1–2 drops of hot EtOAc to redissolve the turbidity and restore a clear solution.
- Controlled Cooling (Prevention of Oiling Out):
  - Wrap the flask in a towel or place it in a warm water bath and allow it to cool to room temperature undisturbed over 2 hours.
  - Mechanism:[1][2][3][4] Rapid cooling traps impurities and causes the product to crash out as an oil. Slow cooling allows the crystal lattice to exclude impurities.
- Crystallization & Collection:
  - Once at room temperature, place the flask in an ice bath (0°C) for 30 minutes to maximize yield.
  - Filter the crystals using vacuum filtration (Buchner funnel).[1]
  - Wash the cake with cold Hexanes.
  - Dry under vacuum at room temperature (do not heat, as the compound may sublime or melt).

Module 3: Troubleshooting Hub

Issue 1: The Product "Oils Out" (Liquid-Liquid Phase Separation)

© 2026 BenchChem. All rights reserved.

Symptom: Instead of crystals, oily droplets form at the bottom of the flask as the solution cools. Cause: The temperature of the solution is higher than the melting point of the solute when saturation is reached, or impurities have depressed the melting point.[5]

Corrective Actions:

- The "Re-Heat" Method: Re-heat the mixture to redissolve the oil. Add a small amount of the "good" solvent (EtOAc).[6] Add a seed crystal of pure product as the solution cools to ~40°C.
- The Trituration Method: If the oil persists, decant the supernatant solvent. Add fresh cold Hexanes to the oil and scratch the glass surface vigorously with a glass rod to induce nucleation.
- Switch Solvents: Move to System B (DCM/Hexane). Since DCM boils at 40°C, the recrystallization temperature remains below the melting point of the solid, physically preventing oil formation.

Issue 2: Low Yield / No Crystallization

Symptom: The solution remains clear even on ice. Cause: Too much "good" solvent (EtOAc) was used, or the compound is too soluble in the antisolvent.

Corrective Actions:

- Evaporative Concentration: Gently boil off excess solvent (in the hood) until the volume is reduced by 30%.
- Antisolvent Boost: Add more Hexanes until turbidity returns, then cool again.

Issue 3: Hydrolysis (Decomposition)

Symptom: The product smells acrid (like HCl) or TLC shows a baseline spot (polar carboxylic acid/amine breakdown). Cause: Prolonged heating in aqueous solvents (Ethanol/Water) or presence of basic impurities.

Corrective Actions:

- Avoid Water: Strictly use anhydrous organic solvents (EtOAc/Hexane or Toluene).

© 2026 BenchChem. All rights reserved.

- Neutralize: If the crude material contains residual amine, wash the organic solution with dilute 1N HCl before attempting recrystallization to remove the basic catalyst.

Workflow Visualization: The "Anti-Oil" Protocol

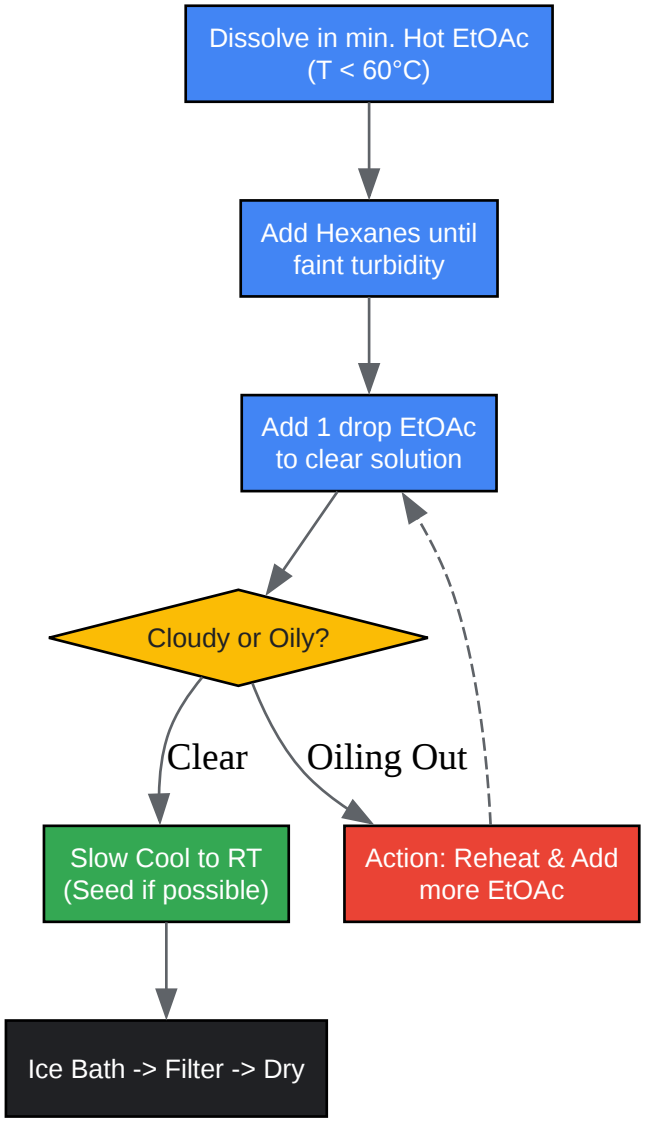

Click to download full resolution via product page

Figure 2: Step-by-step workflow emphasizing the critical control loop for preventing oiling out.

References

- Vogel, A. I. (1989). Vogel's Textbook of Practical Organic Chemistry (5th ed.). Longman Scientific & Technical.

© 2026 BenchChem. All rights reserved.

- Perrin, D. D., & Armarego, W. L. F. (1988). Purification of Laboratory Chemicals (3rd ed.). Pergamon Press.
- Organic Syntheses. (1927). Chloroacetamide.[7][8][9][10][11] Org. Synth. 7, 16; Coll. Vol. 1, 153. Link (Foundational procedure for chloroacetamide synthesis and aqueous recrystallization limits).
- PubChem. (n.d.).[9][11] 2-Chloro-N-phenethylacetamide Compound Summary. National Library of Medicine. Link (Verified physical properties and melting point data).
- MIT OpenCourseWare. (n.d.). Recrystallization Guide. Department of Chemistry. Link (General methodology for two-solvent systems).

Need Custom Synthesis?

BenchChem offers custom synthesis for rare earth carbides and specific isotopiclabeling.

Email: info@benchchem.com or Request Quote Online.

Sources

- 1. ocw.mit.edu [ocw.mit.edu]
- 2. Acid- and Base-Mediated Hydrolysis of Dichloroacetamide Herbicide Safeners - PMC [pmc.ncbi.nlm.nih.gov]
- 3. pubs.acs.org [pubs.acs.org]
- 4. CN102887832B - Method for synthesizing chloroacetamide compound with large steric hindrance by water phase reaction - Google Patents [patents.google.com]
- 5. chem.libretexts.org [chem.libretexts.org]
- 6. m.youtube.com [m.youtube.com]
- 7. Acid- and base-catalyzed hydrolysis of chloroacetamide herbicides - PubMed [pubmed.ncbi.nlm.nih.gov]
- 8. Organic Syntheses Procedure [orgsyn.org]
- 9. Chloroacetanilide | C8H8ClNO | CID 11485 - PubChem [pubchem.ncbi.nlm.nih.gov]
- 10. 2-Chloro-N-phenylacetamide 97 587-65-5 [sigmaaldrich.com]

© 2026 BenchChem. All rights reserved.

- 11. 2-Chloro-N-phenethyl-acetamide | C10H12ClNO | CID 94921 - PubChem [pubchem.ncbi.nlm.nih.gov]
- To cite this document: BenchChem. [Technical Support Center: Recrystallization of Phenethyl Chloroacetamides]. BenchChem, [2026]. [Online PDF]. Available at: [https://www.benchchem.com/product/b1386989#recrystallization-solvents-for-phenethyl-chloroacetamides]

Disclaimer & Data Validity:

The information provided in this document is for Research Use Only (RUO) and is strictly not intended for diagnostic or therapeutic procedures. While BenchChem strives to provide accurate protocols, we make no warranties, express or implied, regarding the fitness of this product for every specific experimental setup.

Technical Support: The protocols provided are for reference purposes. Unsure if this reagent suits your experiment? [Contact our Ph.D. Support Team for a compatibility check]

Need Industrial/Bulk Grade? Request Custom Synthesis Quote

BenchChem

Our mission is to be the trusted global source of essential and advanced chemicals, empowering scientists and researchers to drive progress in science and industry.

Contact

Address: 3281 E Guasti Rd

Ontario, CA 91761, United States

Phone: (601) 213-4426

Email: info@benchchem.com

© 2026 BenchChem. All rights reserved.