differential pulse voltammetry detection of 4-aminophenol

Author: BenchChem Technical Support Team. **Date**: May 2026

Compound of Interest

Compound Name:	*4-Aminophenyl beta-D-Glucuronide Sodium Salt*
Cat. No.:	*B13856933*

Get Quote

Application Note: High-Sensitivity Quantification of 4-Aminophenol Impurities in Paracetamol via Differential Pulse Voltammetry (DPV)

Executive Summary

4-Aminophenol (4-AP) is the primary degradation product and a synthetic intermediate of Paracetamol (Acetaminophen/APAP). Unlike the analgesic parent compound, 4-AP exhibits significant nephrotoxicity and teratogenic potential. Consequently, pharmacopoeias (USP, BP, EP) enforce a strict limit of 0.005% (50 ppm) for 4-AP in drug formulations.[1]

While HPLC is the standard compendial method, it is solvent-intensive and time-consuming. This guide details a Differential Pulse Voltammetry (DPV) protocol using a Multi-Walled Carbon Nanotube (MWCNT) modified electrode. This method offers a rapid, solvent-free alternative with a Limit of Detection (LOD) capable of quantifying 4-AP well below the regulatory threshold, even in the presence of a high excess of Paracetamol.

Scientific Foundation & Mechanism

The Electrochemical Mechanism

The detection relies on the quasi-reversible oxidation of 4-AP. Unlike Paracetamol, which oxidizes at higher potentials (~ +0.45 V vs. Ag/AgCl), 4-AP oxidizes at a lower potential (~ +0.10 V vs. Ag/AgCl) at neutral pH. This thermodynamic separation (~350 mV) allows for simultaneous detection without chromatographic separation.

Reaction Pathway: 4-AP undergoes a 2-electron, 2-proton transfer to form 4-quinoneimine.

Why Differential Pulse Voltammetry (DPV)?

Cyclic Voltammetry (CV) is excellent for characterization but suffers from high capacitive background current, limiting sensitivity. DPV samples the current twice per pulse:

- Before the pulse application (background current).
- At the end of the pulse (Faradaic + background current). By subtracting these values (

  ), the capacitive charging current is largely eliminated, enhancing the signal-to-noise ratio for trace analysis.

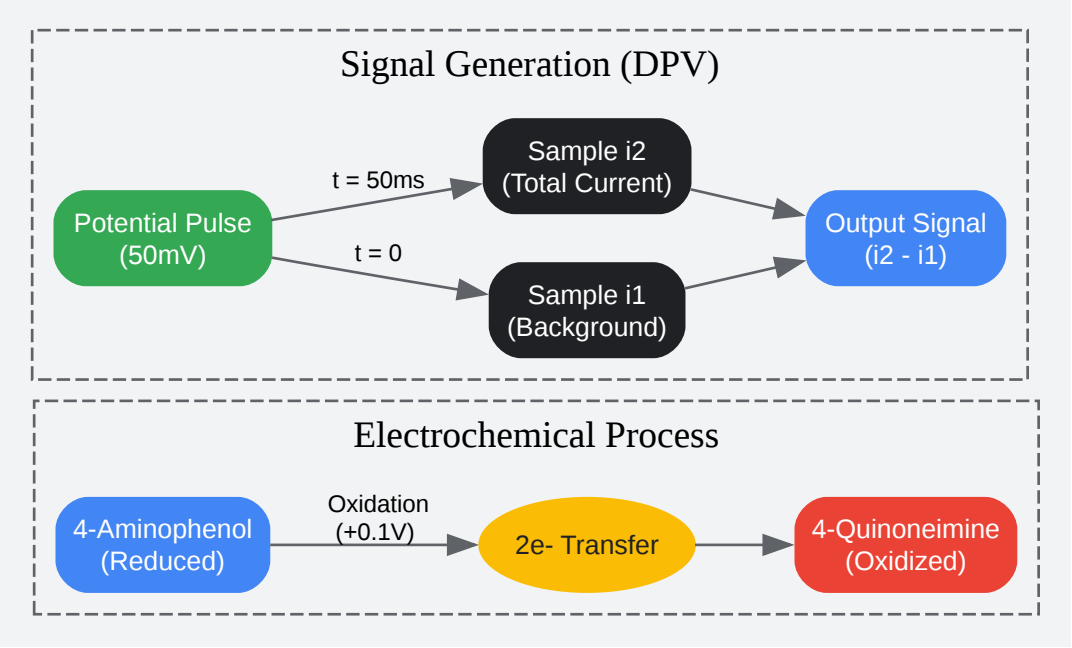

Click to download full resolution via product page

Figure 1: Mechanistic pathway of 4-AP oxidation and the DPV signal extraction principle.

© 2026 BenchChem. All rights reserved.

Materials & Instrumentation

Category	Item	Specification/Notes
Instrumentation	Potentiostat/Galvanostat	Capable of DPV with A sensitivity (e.g., Metrohm Autolab, Gamry).
Electrodes	Working Electrode (WE)	Glassy Carbon Electrode (GCE), 3mm diameter.[2][3]
Reference Electrode (RE)	Ag/AgCl (3M KCl).[4]	
Counter Electrode (CE)	Platinum Wire or Pt Mesh.	
Reagents	4-Aminophenol Standard	Analytical Grade (>99%). Store in dark (light sensitive).
MWCNT Dispersion	Carboxylated MWCNTs (<8 nm OD), 1 mg/mL in DMF or Ethanol.	
Buffer	0.1 M Phosphate Buffered Saline (PBS), pH 7.[3][5]0.	
Polishing Kit	Alumina slurry (1.0 m, 0.3 m, 0.05 m).	

Experimental Protocol

Phase 1: Sensor Fabrication (MWCNT/GCE)

Rationale: Bare GCE surfaces foul easily due to the adsorption of oxidation products. MWCNTs increase the electroactive surface area and facilitate electron transfer.

- Mechanical Polishing:
  - Polish the GCE on a micro-cloth pad using 0.3

© 2026 BenchChem. All rights reserved.

m alumina slurry for 2 minutes in a "figure-8" motion.

- Rinse with DI water.[3][4] Repeat with 0.05

  m alumina.[3]

- Sonicate in 1:1 Ethanol/Water for 3 minutes to remove residual particles.

- Modification:
  - Sonicate the MWCNT dispersion for 30 minutes ensuring homogeneity.
  - Drop-cast 5

    L of the dispersion onto the center of the inverted GCE.
  - Allow to dry under an infrared lamp or in a desiccator for 20 minutes.
- Electrochemical Activation:
  - Immerse the modified electrode in 0.1 M PBS (pH 7.0).
  - Run 10 cycles of Cyclic Voltammetry (CV) from -0.2 V to +0.8 V at 100 mV/s until the voltammogram is stable.

Phase 2: Analytical Method (DPV)

Rationale: Optimization of pulse parameters is critical to separate the 4-AP peak from the massive Paracetamol peak.

Instrument Parameters:

- Technique: Differential Pulse Voltammetry (DPV)[2][3][5][6]
- Potential Range: -0.2 V to +0.6 V
- Step Potential: 5 mV
- Modulation Amplitude: 50 mV (Higher amplitudes increase signal but broaden peaks)

© 2026 BenchChem. All rights reserved.

- Modulation Time: 0.05 s
- Interval Time: 0.5 s
- Scan Rate: Equivalent to 10 mV/s

Workflow:

- Blank Scan: Record a DPV of the blank 0.1 M PBS. Ensure the baseline is flat in the +0.1 V region.
- Standard Preparation: Prepare a 1 mM stock solution of 4-AP in 0.1 M PBS. Note: Prepare fresh daily; 4-AP oxidizes in air.
- Calibration: Spiking method. Add aliquots of stock to the cell to achieve concentrations of 0.5, 1.0, 2.0, 5.0, and 10.0

  M.
- Real Sample (Tablet) Prep:
  - Powder 10 paracetamol tablets.
  - Dissolve a mass equivalent to 1 tablet in 0.1 M PBS.
  - Sonicate for 10 mins, filter (0.45

    m PTFE).
  - Dilute filtrate 1:10 with PBS.

© 2026 BenchChem. All rights reserved.

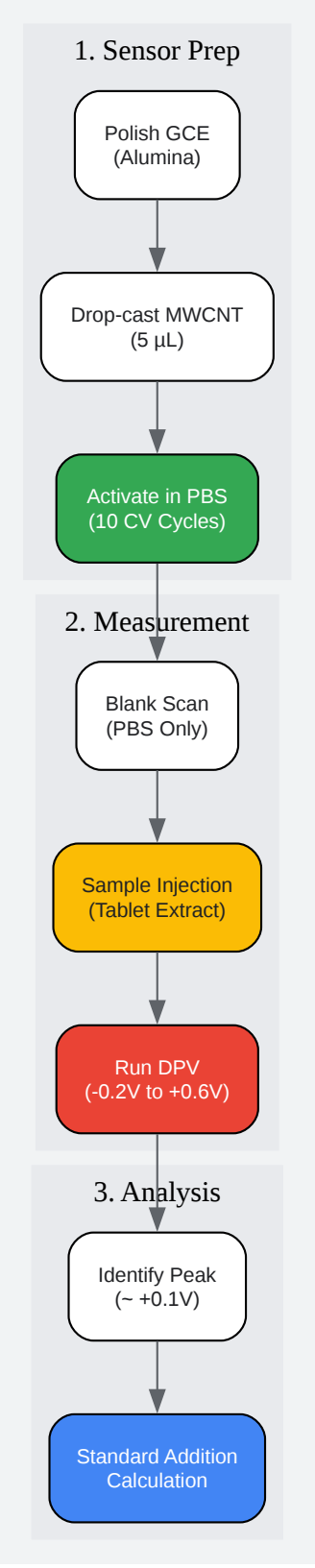

Click to download full resolution via product page

Figure 2: Step-by-step experimental workflow for 4-AP quantification.

© 2026 BenchChem. All rights reserved.

Data Analysis & Validation

Peak Identification

- 4-Aminophenol: Look for a sharp anodic peak centered at +0.10 V ± 0.05 V.
- Paracetamol: Will appear as a large secondary peak at +0.47 V.
- Resolution: The peak-to-peak separation (

) should be >300 mV. If peaks merge, reduce the Pulse Amplitude to 25 mV.

Quantification (Standard Addition Method)

Direct calibration curves can be affected by the "matrix effect" of the high concentration of paracetamol. The Standard Addition Method is recommended for real samples.

- Measure the unknown sample current (

).
- Add a known concentration of 4-AP standard (

).
- Measure the new current (

).
- Calculate concentration (

) using:

Performance Metrics (Expected)

© 2026 BenchChem. All rights reserved.

Parameter	Typical Value (MWCNT/GCE)
Linear Range	0.1 M – 50 M
Limit of Detection (LOD)	0.02 M (approx 2 ppb)
Recovery	98% - 102%
RSD (Precision)	< 3.5%

Troubleshooting & Expert Tips

- Fouling: If the 4-AP peak current decreases by >10% over 3 scans, the electrode is fouled.
  - Fix: Rinse with ethanol, then water.[3] Run 3 blank CV cycles.
- Peak Broadening: Often caused by high resistance in the MWCNT layer.
  - Fix: Ensure the MWCNT layer is thin. Use less volume (3-5 L) or a more dilute dispersion.
- pH Drift: The peak potential ( ) of 4-AP shifts negatively with increasing pH (~59 mV/pH).
  - Fix: Strictly control PBS pH at 7.0. Acidic pH pushes the 4-AP peak closer to the discharge potential, increasing noise.

References

- United States Pharmacopeia (USP).<227> 4-Aminophenol in Acetaminophen-Containing Drug Products.

© 2026 BenchChem. All rights reserved.

- Nidzworski, D., et al. (2025).Simultaneous electrochemical determination of 4-aminophenol and acetaminophen using modified glassy carbon electrode.[4][7] Journal of Environmental and Bioanalytical Electrochemistry.[7] 7
- Gamry Instruments.Differential Pulse Voltammetry (DPV) - Technique Overview. 8
- Chandra, P., et al. (2022).Development of an Efficient Voltammetric Sensor for the Monitoring of 4-Aminophenol Based on Flexible Laser Induced Graphene Electrodes Modified with MWCNT-PANI. MDPI. 9
- Fan, Y., et al. (2019).Simultaneous detection of acetaminophen and 4-aminophenol with an electrochemical sensor based on silver–palladium bimetal nanoparticles and reduced graphene oxide. RSC Advances. 1

Need Custom Synthesis?

BenchChem offers custom synthesis for rare earth carbides and specific isotopiclabeling.

Email: info@benchchem.com or Request Quote Online.

Sources

- 1. Simultaneous detection of acetaminophen and 4-aminophenol with an electrochemical sensor based on silver–palladium bimetal nanoparticles and reduced g ... - RSC Advances (RSC Publishing) DOI:10.1039/C9RA05987C [pubs.rsc.org]
- 2. Differential Pulse Voltammetry (DPV) [pineresearch.com]
- 3. Activated Glassy Carbon Electrode as an Electrochemical Sensing Platform for the Determination of 4-Nitrophenol and Dopamine in Real Samples - PMC [pmc.ncbi.nlm.nih.gov]
- 4. researchgate.net [researchgate.net]
- 5. arcjournals.org [arcjournals.org]
- 6. jebe.samipubco.com [jebe.samipubco.com]
- 7. jebe.samipubco.com [jebe.samipubco.com]
- 8. Differential Pulse Voltammetry (DPV) Gamry Instruments [gamry.com]
- 9. mdpi.com [mdpi.com]

- To cite this document: BenchChem. [differential pulse voltammetry detection of 4-aminophenol]. BenchChem, [2026]. [Online PDF]. Available at: [https://www.benchchem.com/product/b13856933/docs#differential-pulse-voltammetry-detection-of-4-aminophenol]

Disclaimer & Data Validity:

The information provided in this document is for Research Use Only (RUO) and is strictly not intended for diagnostic or therapeutic procedures. While BenchChem strives to provide accurate protocols, we make no warranties, express or implied, regarding the fitness of this product for every specific experimental setup.

Technical Support: The protocols provided are for reference purposes. Unsure if this reagent suits your experiment?

Need Industrial/Bulk Grade? Request Custom Synthesis Quote

BenchChem

Our mission is to be the trusted global source of essential and advanced chemicals, empowering scientists and researchers to drive progress in science and industry.

Contact

Address: 3281 E Guasti Rd

Ontario, CA 91761, United States

Phone: (601) 213-4426

Email: info@benchchem.com

Contact our Ph.D. Support Team for a compatibility check