Comparative analysis of aniline oxidation methods

Author: BenchChem Technical Support Team. **Date**: February 2026

Compound of Interest		
Compound Name:	*N-Ethyl-N-(2-phenoxyethyl)aniline*	
CAS No.:	*41378-51-2*	
Cat. No.:	*B13824219*	*Get Quote*

Aniline, a foundational aromatic amine, serves as a critical precursor in the synthesis of a vast array of industrial products, including dyes, pharmaceuticals, and polymers.[1] The reactivity of its amino group attached to a benzene ring makes it particularly susceptible to oxidation, a process that can be steered to yield a variety of valuable products.[1] The specific outcome of aniline oxidation—ranging from the conductive polymer polyaniline (PANI) to key chemical intermediates like nitrobenzene, nitrosobenzene, and benzoquinone—is highly dependent on the chosen methodology and reaction conditions.[1][2]

This guide offers a comparative analysis of the principal methods for aniline oxidation: chemical, electrochemical, and enzymatic. Designed for researchers, scientists, and professionals in drug development, this document provides an in-depth look at the mechanisms, experimental protocols, and relative performance of each approach, grounded in field-proven insights and authoritative data.

Part 1: Chemical Oxidation Methods

Chemical oxidation is the most traditional and widely used approach for transforming aniline. It involves the use of a chemical oxidizing agent to abstract electrons from the aniline molecule, initiating a cascade of reactions. The choice of oxidant is paramount as it dictates the reaction pathway and final product.[1]

Method 1: Oxidative Polymerization to Polyaniline (PANI)

© 2026 BenchChem. All rights reserved.

The synthesis of polyaniline, a prominent conducting polymer, is frequently achieved through chemical oxidative polymerization, typically in an acidic environment. Ammonium persulfate (APS) is one of the most effective and commonly used oxidants for this purpose.[3][4]

Mechanism of Action

The polymerization process is initiated by the oxidation of aniline monomers by APS to form aniline cation radicals. These radicals then couple, typically in a head-to-tail fashion, to form dimers. The dimers are subsequently re-oxidized and couple with other radicals, leading to chain propagation.[5] The acidic medium is crucial as it protonates the aniline, preventing over-oxidation and promoting the formation of the desired conductive emeraldine salt form of PANI.[5][6]

Experimental Protocol: Chemical Synthesis of Polyaniline[7]

- Monomer Solution: Dissolve 5.0 g (0.054 mol) of aniline in 75 mL of 1.0 M HCl in a beaker. Cool the solution to 0-5°C in an ice bath.
- Oxidant Solution: Separately, dissolve 12.3 g (0.054 mol) of ammonium persulfate in 70 mL of 1.0 M HCl and cool to 0-5°C.
- Polymerization: Slowly add the ammonium persulfate solution dropwise to the stirred aniline solution. The reaction is exothermic, and the temperature should be maintained below 5°C.
- Reaction: Continue stirring the mixture for 2-4 hours. The solution will gradually turn dark green/black, indicating the formation of polyaniline precipitate.
- Isolation: Filter the precipitate using a Buchner funnel.
- Washing: Wash the filter cake with 1.0 M HCl followed by acetone or methanol to remove unreacted monomer, oxidant, and oligomers.
- Drying: Dry the resulting polyaniline powder in a vacuum oven at 60°C for 24-48 hours.

© 2026 BenchChem. All rights reserved.

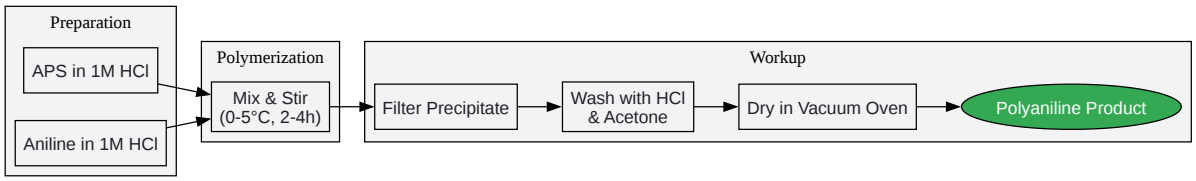

Click to download full resolution via product page

Workflow for chemical synthesis of polyaniline.

Method 2: Selective Oxidation to Small Molecules

By carefully selecting the oxidant and controlling reaction conditions, aniline can be selectively oxidized to non-polymeric products like benzoquinone, nitrosobenzene, or nitrobenzene.[1]

Mechanism of Action

- With Dichromates: Strong oxidizing agents like potassium dichromate ($K_2Cr_2O_7$) in an acidic medium can oxidize aniline to p-benzoquinone. The reaction proceeds through intermediates such as 4-aminophenol and quinoneimine.
- With Hydrogen Peroxide: Hydrogen peroxide (H_2O_2) is considered a "green" oxidant as its primary byproduct is water.[8] In the presence of catalysts like heteropolyoxometalates, H_2O_2 can selectively oxidize aniline to nitrosobenzene, which can be further oxidized to nitrobenzene.[8][9][10] The product composition depends heavily on the catalyst and reaction conditions.[9]

Experimental Protocol: Catalytic Oxidation to Nitrosobenzene[8]

- Catalyst Suspension: To a stirred solution of a heteropolyacid catalyst (e.g., $H_3PW_{12}O_{40}$, 0.015 mmol) in dichloromethane (CH_2Cl_2, 7 mL), add 30% aqueous H_2O_2 (8 mmol).
- Reaction Initiation: Add aniline (4 mmol) to the mixture.

© 2026 BenchChem. All rights reserved.

- Reaction: Stir the mixture vigorously under air at room temperature. Monitor the progress of the reaction using an appropriate technique (e.g., TLC or GC).
- Product Extraction: After completion (typically within 1-2 hours), extract the products from the aqueous phase with dichloromethane.
- Isolation: Combine the organic layers, dry over anhydrous sodium sulfate, and remove the solvent under reduced pressure to obtain the crude product, primarily nitrosobenzene.

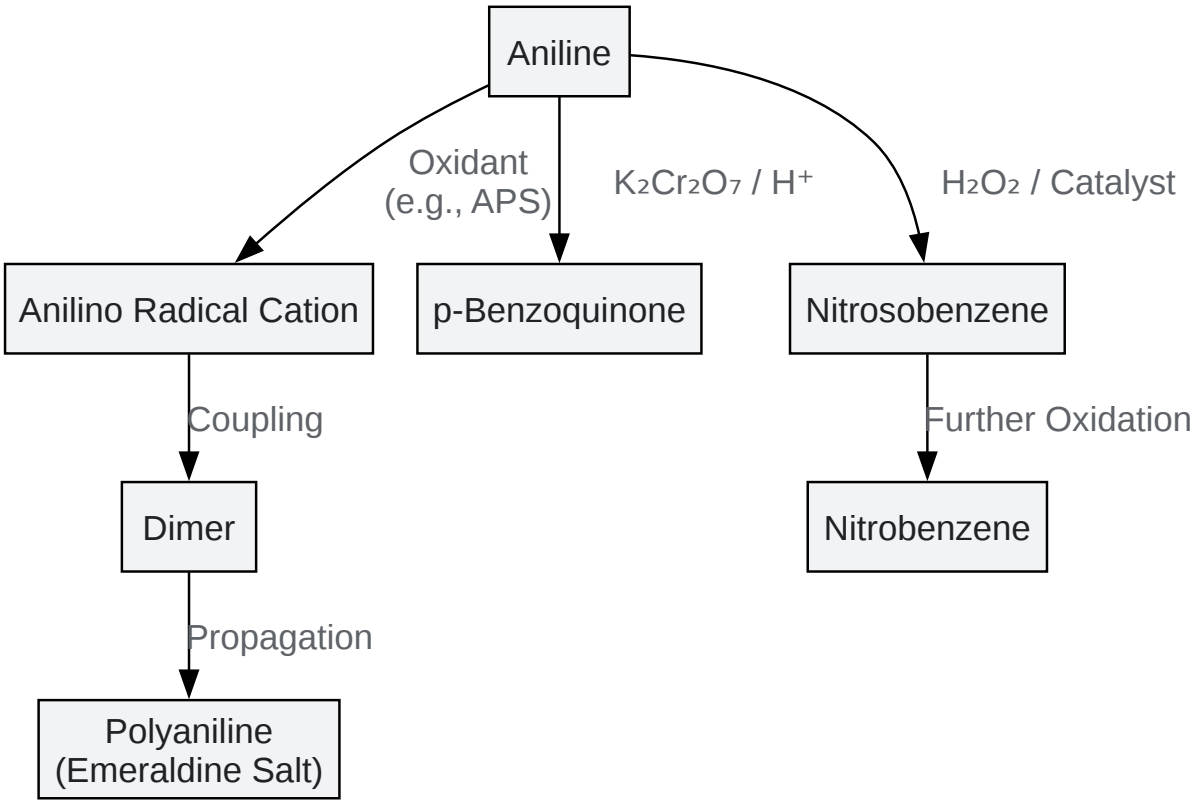

Click to download full resolution via product page

Major chemical oxidation pathways of aniline.

Part 2: Electrochemical Oxidation

Electrochemical methods offer a high degree of control over the oxidation process by using an applied potential to drive the reaction at an electrode surface.[11] This technique is particularly advantageous for synthesizing high-quality, uniform polymer films.[12]

© 2026 BenchChem. All rights reserved.

Mechanism of Action

Electrochemical oxidation, or electropolymerization, of aniline is typically performed in an acidic aqueous solution.[5] The process begins with the oxidation of the aniline monomer at the anode surface to form a reactive cation radical.[5][13] This is generally the rate-determining step.[5] These radicals then couple, eliminate protons, and rearomatize to form dimers and oligomers.[5][14] The growing polymer chain remains on the electrode surface and continues to propagate, forming a film.[12]

Three primary electrochemical techniques are employed:[12]

- Potentiodynamic (Cyclic Voltammetry): The potential is swept back and forth between two limits, allowing for both oxidation and reduction cycles to be observed and controlled.
- Potentiostatic: A constant potential is applied to the working electrode, providing a constant driving force for the oxidation.
- Galvanostatic: A constant current is applied, which controls the rate of polymerization.

Experimental Protocol: Electropolymerization of Aniline via Cyclic Voltammetry[13][15]

- Electrolyte Preparation: Prepare an aqueous solution of 0.1 M aniline in 0.5 M H_2SO_4.
- Cell Setup: Assemble a three-electrode electrochemical cell. Use an indium tin oxide (ITO) coated glass slide or a glassy carbon electrode as the working electrode, a platinum wire as the counter electrode, and an Ag/AgCl electrode as the reference electrode.[13][15]
- Polymerization: Immerse the electrodes in the electrolyte solution. Apply a cyclic potential sweep between -0.2 V and +1.2 V (vs. Ag/AgCl) at a scan rate of 50 mV/s for a set number of cycles (e.g., 10-20 cycles).[15]
- Film Deposition: A green polyaniline film will be observed growing on the surface of the working electrode. The film thickness increases with the number of cycles.
- Post-Treatment: After polymerization, remove the working electrode, rinse it with deionized water, and allow it to air dry.

© 2026 BenchChem. All rights reserved.

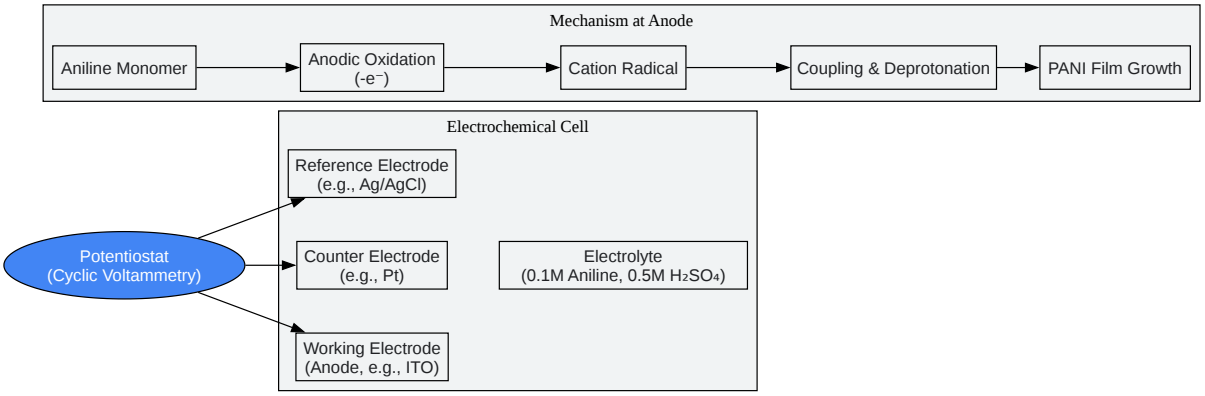

Click to download full resolution via product page

Electrochemical polymerization setup and workflow.

Part 3: Enzymatic Oxidation (Biocatalysis)

Enzymatic oxidation represents an environmentally benign, or "green," alternative to conventional methods.[6][16] This approach utilizes enzymes, most commonly laccases, to catalyze the oxidation of aniline using molecular oxygen from the air as the ultimate oxidant, producing water as the only byproduct.[16]

Mechanism of Action

Laccases are multi-copper oxidases that catalyze the one-electron oxidation of a wide range of phenolic and aromatic amine substrates.[6][17] In the case of aniline, the laccase abstracts an electron to form an anilino radical.[6][16] These radicals then undergo non-enzymatic coupling and polymerization. To guide the polymerization towards the desired linear, conductive polyaniline (emeraldine salt), "template" molecules such as anionic polyelectrolytes or

© 2026 BenchChem. All rights reserved.

surfactants are often added to the reaction medium.[6][16] These templates help to align the aniline monomers and growing polymer chains, preventing the formation of undesired, insoluble products.[16]

Experimental Protocol: Laccase-Catalyzed Synthesis of Polyaniline[18]

- Solution Preparation: Prepare a reaction solution containing 10 mM aniline and 10 mM of a template, such as sodium dodecylbenzenesulfonate (SDBS), in a 0.1 M sodium-citrate phosphate buffer (pH 3.5).
- Pre-mixing: Stir the solution for 1 hour to allow for the formation of aniline-template complexes.
- Enzyme Addition: Initiate the polymerization by adding laccase (e.g., from Trametes hirsuta) to a final concentration of 0.4 U/mL.
- Reaction: Allow the reaction to proceed for 10-24 hours at room temperature with continuous stirring, using atmospheric oxygen as the oxidant.
- Monitoring: The formation of polyaniline can be monitored by UV-vis spectroscopy, observing the characteristic absorption bands of the emeraldine salt form.
- Isolation: Depending on the solubility of the PANI-template complex, the product can be isolated by precipitation (e.g., by changing pH) followed by filtration or by dialysis.

© 2026 BenchChem. All rights reserved.

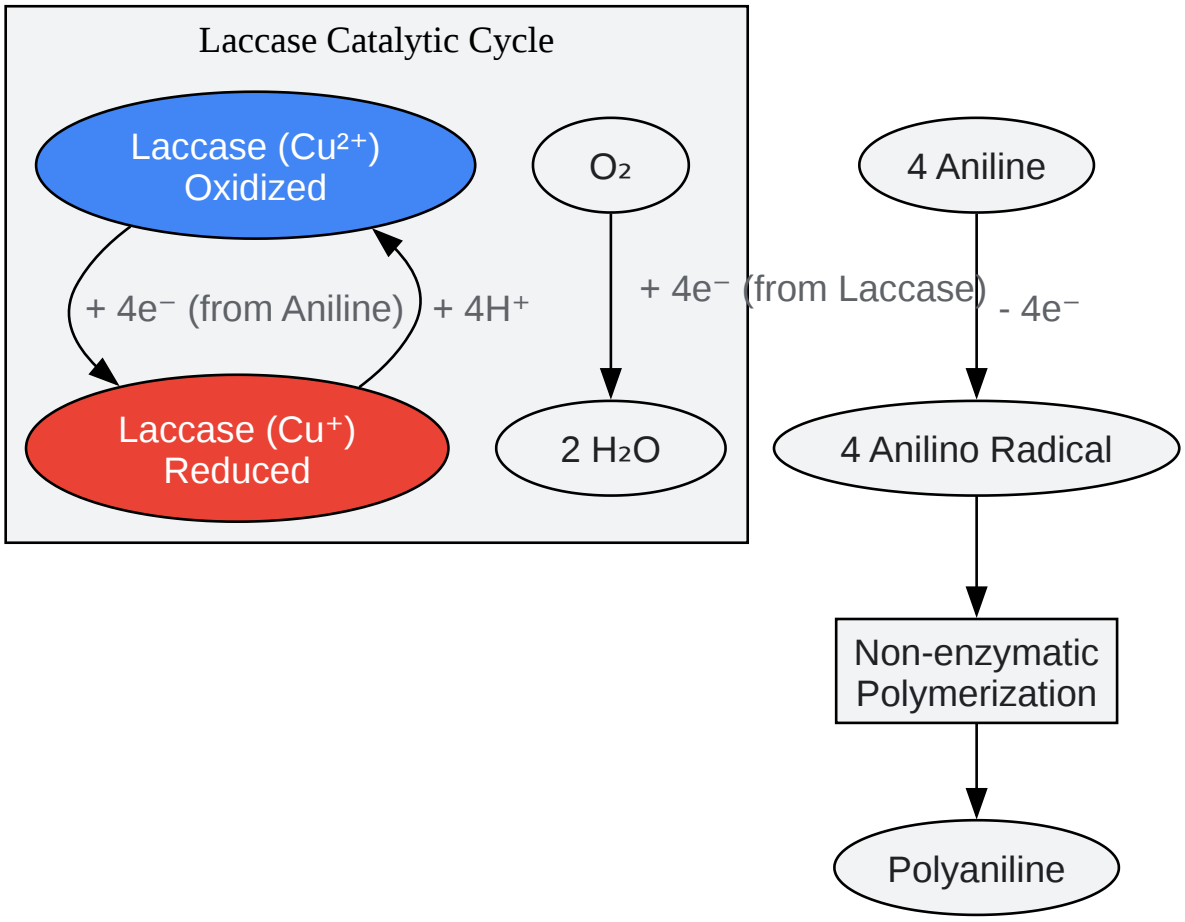

Click to download full resolution via product page

Catalytic cycle for laccase-mediated aniline oxidation.

Part 4: Comparative Analysis

The choice of an aniline oxidation method depends critically on the desired product, required purity, scale of the reaction, and environmental considerations. Each approach has distinct advantages and limitations.

© 2026 BenchChem. All rights reserved.

Feature	Chemical Oxidation	Electrochemical Oxidation	Enzymatic Oxidation
Primary Products	Polyaniline, Nitrobenzene, Nitrosobenzene, Benzoquinone, Azobenzene[1][2]	High-quality Polyaniline films, Oligomers[12][19]	Polyaniline, Oligomers[16][20]
Control & Selectivity	Moderate; highly dependent on oxidant, stoichiometry, and temperature.[1]	High; precisely controlled by potential, current, and charge passed.[12]	Moderate to High; dependent on enzyme choice, pH, and template presence.[16][17]
Reaction Conditions	Often requires strong acids/bases, stoichiometric oxidants, and temperature control (-3 to 100°C+).[1][7]	Requires conductive substrate, electrolyte solution, and external power source. Typically at room temperature.[12][13]	Mild conditions: aqueous buffer, near-neutral or slightly acidic pH, room temperature.[6][18]
Yield & Purity	Can be high, but byproducts and oligomers are common.[4][21]	High purity for deposited films, but overall yield may be limited by surface area.	Yield can be high, but enzyme stability and cost may be limiting factors.[22]
Environmental Impact	Moderate to High; use of strong acids and metal-based oxidants (e.g., Cr(VI)) can generate hazardous waste.[1][23]	Low; avoids bulk chemical oxidants, but solvent/electrolyte disposal is a consideration.	Low; uses O_2 as oxidant, produces water, biodegradable catalyst. Considered a "green" method.[6][16]
Scalability & Cost	Highly scalable and uses relatively inexpensive bulk chemicals (e.g., APS).[3]	Scalable for surface coatings and thin films, but bulk production is difficult.	Currently limited scalability for bulk production. Enzyme cost and stability are major hurdles.[22]

© 2026 BenchChem. All rights reserved.

		Equipment costs can be high.	
Key Advantages	Simplicity, low cost for bulk synthesis, versatility in product scope.	Excellent control over film thickness and morphology, high purity of deposited material.	Environmentally friendly, high specificity under mild conditions.
Key Disadvantages	Difficult to control, potential for over-oxidation, hazardous waste generation.	Requires a conductive substrate, limited to surface modification/film growth.	High cost of enzymes, potential for enzyme denaturation, slower reaction rates.

Conclusion

The oxidation of aniline is a versatile chemical transformation with multiple established methodologies, each with a unique profile of strengths and weaknesses.

- Chemical oxidation remains the workhorse for the bulk synthesis of polyaniline and other aniline derivatives due to its low cost and simplicity. However, it often suffers from a lack of precise control and generates significant chemical waste.
- Electrochemical oxidation provides unparalleled control over the synthesis of high-quality polyaniline films, making it the method of choice for applications in electronics, sensors, and coatings where precise material properties are critical.
- Enzymatic oxidation is an emerging green alternative that operates under mild, environmentally benign conditions. While currently limited by cost and scalability, ongoing research into more robust and efficient enzymes holds promise for future sustainable chemical production.

The optimal method for a given application requires a careful evaluation of the desired product characteristics, production scale, cost constraints, and environmental impact. For drug development and fine chemical synthesis where selectivity and mild conditions are paramount, enzymatic and advanced catalytic chemical methods are increasingly attractive. For materials

© 2026 BenchChem. All rights reserved.

science and electronics, electrochemical approaches offer superior control. For bulk production, traditional chemical oxidation continues to dominate but with a growing need for greener and more efficient protocols.

References

- Yang Xu. The Chemical Oxidation of Aniline: Mechanisms, Applications, and Environmental Implications. Advanced Journal of Chemistry-Section A.
- García-Pérez, E., et al. (2022). Mechanistic Aspects of the Electrochemical Oxidation of Aliphatic Amines and Aniline Derivatives. Molecules. [Link]
- Shawky, A., et al. (2025).
- Bernard, M. C., & Hugot-Le Goff, A. (1998). Mechanism of ANI electrochemical oxidation and dimer formation. ResearchGate. [Link]
- Al-Omair, M. A., et al. (2018).
- Chang, K. H., et al. Experiment 11: CONDUCTING POLYMER — POLYANILINE.
- Kholdeeva, O. A. (2005).
- Kholdeeva, O. A., et al. (2004). Catalytic Oxidation of Aniline by Aqueous Hydrogen Peroxide in the Presence of Some Heteropolyoxometalates. SciELO. [Link]
- Bassanini, I., et al. (2023). Studies on the Oxidation of Aromatic Amines Catalyzed by Trametes versicolor Laccase.
- Chou, S., et al. (2010). Effect of hydrogen peroxide on aniline oxidation by electro-Fenton and fluidized-bed Fenton processes. PubMed. [Link]
- Pfitzner, A., et al. (2014). Efficient Polymerization of the Aniline Dimer p-Aminodiphenylamine (PADPA) with Trametes versicolor Laccase/O2 as Catalyst and Oxidant and AOT Vesicles as Templates. ACS Catalysis. [Link]
- Oxidation of Amines and N-Hetarenes. Science of Synthesis.
- Subathra, M., & Vellaisamy, M. (2022). OXIDATION KINETICS OF ANILINE BY ZINC DICHROMATE. Journal of Advanced Scientific Research. [Link]
- Liu, Y., et al. (2017).

© 2026 BenchChem. All rights reserved.

- Gadad, S. M., et al. (2005). Catalyzed oxidation of aniline by hydrogen peroxide in the presence of cnts: A Possible case of a nanodimension reaction. RIT Digital Institutional Repository. [Link]
- Stejskal, J., et al. (2006). Oxidation of aniline with ammonium persulfate in an acidic aqueous medium. ResearchGate. [Link]
- Li, Y., et al. (2012). Synthesis of Conducting Polyaniline Using Compound Oxidant. Scientific.net. [Link]
- Grgur, B. N. (2011). Electrochemical Polymerization of Aniline. SciSpace. [Link]
- Tuncel, M., et al. (2013). Oxidation of Aniline using Different Reaction Pathways. Asian Journal of Chemistry. [Link]
- Zhou, F., & Van Berkel, G. J. (1999). Electrochemical Polymerization of Aniline Investigated Using On-Line Electrochemistry/Electrospray Mass Spectrometry. Analytical Chemistry. [Link]
- Shumakovich, G. P., et al. (2014). Laccase-catalyzed synthesis of aniline oligomers and their application for the protection of copper against corrosion. The Royal Society of Chemistry. [Link]
- Bassanini, I., et al. (2023). Studies on the Oxidation of Aromatic Amines Catalyzed by Trametes versicolor Laccase. CNR-IRIS. [Link]
- Xu, F., et al. (1996). Oxidation of phenols, anilines, and benzenethiols by fungal laccases: correlation between activity and redox potentials as well as halide inhibition. PubMed. [Link]
- Gholizadeh, M., et al. (2016). Evaluation of oxidative enzymes for efficient oxidation of aniline and phenolic pollutants. ResearchGate. [Link]
- Azevedo, A. M., et al. (2019). Effect of Additives on the in situ Laccase-Catalyzed Polymerization of Aniline Onto Bacterial Cellulose. PMC.
- Kruk, T., et al. (2026). Aniline Electropolymerization on Indium–Tin Oxide Nanofilms with Different Surface Resistivity: A Comprehensive Study. MDPI. [Link]

© 2026 BenchChem. All rights reserved.

- Al-hussain, S. A. H. (2015). Synthesis and Characterization of Polyaniline at Different Temperatures. Research Journal of Pharmaceutical, Biological and Chemical Sciences.
- Pfitzner, A., et al. (2019). Synthesizing Polyaniline With Laccase/O2 as Catalyst. Frontiers in Materials. [Link]
- Oxidation of aniline with acidified potassium dichromate. Vedantu. [Link]
- Kumar, A., & Sharma, G. (2014). Synthesis and Characterization of Polyaniline-Ferric Ammonium Sulphate Nanocomposites. International Journal of ChemTech Research. [Link]
- Pfitzner, A., et al. (2019). Synthesizing Polyaniline With Laccase/O2 as Catalyst. PMC. [Link]
- Aniline. Wikipedia. [Link]
- Bouzara, Z., et al. (2021). Polyaniline Thin Film Prepared by Electrochemical Polymerization Method. Biointerface Research in Applied Chemistry. [Link]
- Electrochemical Oxidation for the Degradation of Aniline on the SnO2/Ti Anode. Journal of Electrochemistry. [Link]
- Subathra, M., & Vellaisamy, M. (2022). OXIDATION KINETICS OF ANILINE BY ZINC DICHROMATE. Journal of Advanced Scientific Research. [Link]
- Morávková, Z., et al. (2020). The First Stages of Chemical and Electrochemical Aniline Oxidation—Spectroscopic Comparative Study. MDPI. [Link]
- Usluer, O., et al. (2006). Polymerization of aniline by copper-catalyzed air oxidation. Journal of Polymer Science Part A: Polymer Chemistry. [Link]
- Tuncel, M., et al. (2025). Oxidation of aniline using different reaction pathways. ResearchGate. [Link]
- Osterholm, J. E., et al. (1993).
- García-Pérez, E., et al. (2022). Mechanistic Aspects of the Electrochemical Oxidation of Aliphatic Amines and Aniline Derivatives. MDPI. [Link]

© 2026 BenchChem. All rights reserved.

- El-Jaouhari, A., et al. (2016). Chemical Oxidative Polymerization of Polyaniline: A Practical Approach for Preparation of Smart Conductive Textiles. ACS Publications. [Link]

Need Custom Synthesis?

BenchChem offers custom synthesis for rare earth carbides and specific isotopiclabeling.

Email: info@benchchem.com or Request Quote Online.

Sources

- 1. openaccessjournals.com [openaccessjournals.com]
- 2. Aniline - Wikipedia [en.wikipedia.org]
- 3. teaching.ch.ntu.edu.tw [teaching.ch.ntu.edu.tw]
- 4. researchgate.net [researchgate.net]
- 5. scispace.com [scispace.com]
- 6. Synthesizing Polyaniline With Laccase/O2 as Catalyst - PMC [pmc.ncbi.nlm.nih.gov]
- 7. rjpbcs.com [rjpbcs.com]
- 8. asianpubs.org [asianpubs.org]
- 9. scielo.br [scielo.br]
- 10. repository.rit.edu [repository.rit.edu]
- 11. Mechanistic Aspects of the Electrochemical Oxidation of Aliphatic Amines and Aniline Derivatives - PMC [pmc.ncbi.nlm.nih.gov]
- 12. assets.cureusjournals.com [assets.cureusjournals.com]
- 13. mdpi.com [mdpi.com]
- 14. researchgate.net [researchgate.net]
- 15. biointerfaceresearch.com [biointerfaceresearch.com]
- 16. Frontiers | Synthesizing Polyaniline With Laccase/O2 as Catalyst [frontiersin.org]
- 17. Oxidation of phenols, anilines, and benzenethiols by fungal laccases: correlation between activity and redox potentials as well as halide inhibition - PubMed [pubmed.ncbi.nlm.nih.gov]
- 18. rsc.org [rsc.org]

© 2026 BenchChem. All rights reserved.

- 19. pubs.acs.org [pubs.acs.org]
- 20. mdpi.com [mdpi.com]
- 21. Synthesis of Conducting Polyaniline Using Compound Oxidant | Scientific.Net [scientific.net]
- 22. pubs.acs.org [pubs.acs.org]
- 23. pdfs.semanticscholar.org [pdfs.semanticscholar.org]

- To cite this document: BenchChem. [Comparative analysis of aniline oxidation methods]. BenchChem, [2026]. [Online PDF]. Available at: [https://www.benchchem.com/product/b13824219#comparative-analysis-of-aniline-oxidation-methods]

Disclaimer & Data Validity:

The information provided in this document is for Research Use Only (RUO) and is strictly not intended for diagnostic or therapeutic procedures. While BenchChem strives to provide accurate protocols, we make no warranties, express or implied, regarding the fitness of this product for every specific experimental setup.

Technical Support: The protocols provided are for reference purposes. Unsure if this reagent suits your experiment? [Contact our Ph.D. Support Team for a compatibility check]

Need Industrial/Bulk Grade? Request Custom Synthesis Quote

BenchChem

Our mission is to be the trusted global source of essential and advanced chemicals, empowering scientists and researchers to drive progress in science and industry.

Contact

Address: 3281 E Guasti Rd

Ontario, CA 91761, United States

Phone: (601) 213-4426

Email: info@benchchem.com

© 2026 BenchChem. All rights reserved.