Application Notes & Protocols: fac-Ir(3-tBu-ppy)$_3$ in Radical Polymerization

Author: BenchChem Technical Support Team. **Date**: May 2026

Compound of Interest

Compound Name: *fac-Ir(3-tBu-ppy)3*

Cat. No.: *B13777768*

Get Quote

Subject: Photoredox-Initiated Radical Polymerization Using Tris[2-(p-tert-butylphenyl)pyridine]iridium(III)

For: Researchers, Polymer Scientists, and Drug Development Professionals

Foreword: Harnessing Light for Precision Polymer Synthesis

The advent of visible-light photoredox catalysis has revolutionized modern synthetic chemistry, offering mild, efficient, and temporally controlled reaction pathways.[1][2] Within this field, iridium(III) complexes, particularly fac-tris(2-phenylpyridine)iridium(III) (fac-Ir(ppy)$_3$) and its derivatives, have emerged as paramount photocatalysts.[3] Their exceptional photophysical properties—including high quantum yields, long-lived triplet excited states, and tunable redox potentials—make them ideal for generating radical intermediates under gentle irradiation.[4]

This guide focuses on a key derivative, fac-tris[2-(4-tert-butylphenyl)pyridine]iridium(III) (fac-Ir(3-tBu-ppy)$_3$). The introduction of the tert-butyl group enhances solubility in common organic solvents and can subtly modify the electronic properties, yet the fundamental catalytic mechanism remains consistent with the well-studied fac-Ir(ppy)$_3$ parent complex. We will

© 2026 BenchChem. All rights reserved.

dissect the mechanistic underpinnings of polymerization initiation, showcase its broad applicability, and provide a robust, field-proven protocol for its implementation in the laboratory.

The Engine of Initiation: Mechanistic Principles

The initiation of radical polymerization by fac-Ir(ppy)$_3$ and its analogs is a tale of photo-induced electron transfer (PET). The process begins with the absorption of a photon (typically blue light, ~450-465 nm), which promotes the catalyst from its ground state to an excited singlet state. This is followed by rapid intersystem crossing to a long-lived triplet metal-to-ligand charge transfer (^{3}MLCT) excited state. This excited state, denoted as [fac-Ir(ppy)$_3$]*, is both a more potent oxidant and a more potent reductant than its ground-state counterpart.

From this pivotal excited state, two primary catalytic cycles can generate the radicals necessary for polymerization: the Reductive Quenching Cycle and the Oxidative Quenching Cycle.[5][6][7] The operative pathway is determined by the nature of the co-initiators and monomers present in the system.

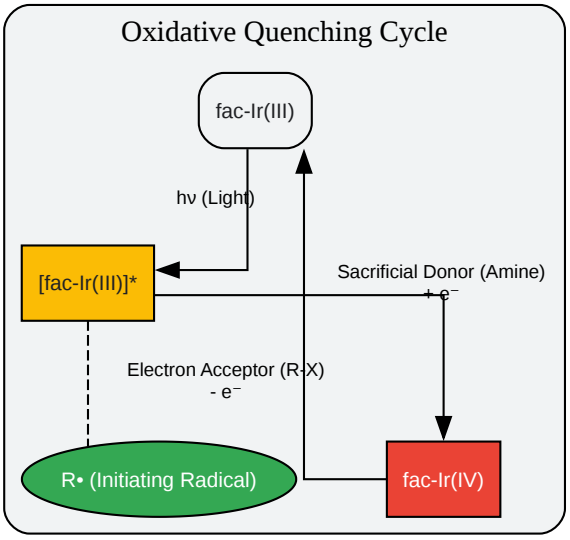

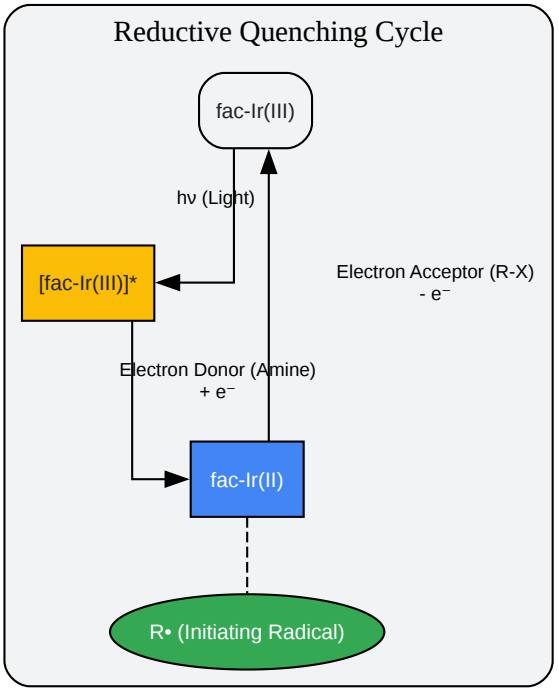

© 2026 BenchChem. All rights reserved.

Click to download full resolution via product page

Figure 1: The two primary photoredox catalytic cycles for radical generation.

Expert Insight: The choice between quenching cycles is a critical experimental decision. The reductive quenching cycle is often preferred for controlled polymerization as it typically involves a sacrificial amine that regenerates the catalyst, allowing for lower catalyst loadings. The oxidative cycle is highly effective for initiating polymerization from alkyl halides, a cornerstone of photo-ATRP (Atom Transfer Radical Polymerization).[8]

Applications & Versatility

The mild conditions and high efficiency of fac-Ir(ppy)$_3$-based systems have enabled the polymerization of a wide array of monomers, including those with sensitive functional groups that are incompatible with traditional thermal initiation. This method provides exceptional temporal control; the polymerization proceeds only when the light is on and stops completely in the dark, allowing for the synthesis of complex polymer architectures like block copolymers with high fidelity.[8]

© 2026 BenchChem. All rights reserved.

Monomer	Initiator System	Solvent	Light Source	Key Features & Outcomes	Reference
Methyl Methacrylate (MMA)	Perfluoroalkyl Iodide	Acetonitrile	Blue LED	Controlled polymerization (Mw/Mn ~ 1.4), "On/Off" temporal control demonstrated.	[8]
Glycidyl Methacrylate (GMA)	Perfluoroalkyl Iodide	Acetonitrile	Blue LED	High conversion (up to 96%) achieved, preserving the reactive epoxy group.	[8]
Trifluoroethyl Methacrylate (TFEMA)	Perfluoroalkyl Iodide	Acetonitrile	Blue LED	Efficient polymerization of functional methacrylate with high conversion (94%).	[8]
Various Acrylates	Amine / Alkyl Halide	DMSO	Not Specified	General applicability for free radical polymerization of acrylates.	[2]
Vinyl Ethers	2-(dodecylthioc	Not Specified	455 nm Light	Used in PET-RAFT	[9]

© 2026 BenchChem. All rights reserved.

arbonothioylt hio) propionic acid (DTPA)	processes to achieve single monomer unit insertion with minimal side reactions.

Field-Proven Protocol: Photo-Controlled Polymerization of Methyl Methacrylate (MMA)

This protocol details a representative procedure for the controlled radical polymerization of MMA using fac-Ir(3-tBu-ppy)$_3$ via an oxidative quenching mechanism, adapted from established principles for fac-Ir(ppy)$_3$.[8]

A. Materials & Equipment

- Photocatalyst:fac-Ir(3-tBu-ppy)$_3$ (or fac-Ir(ppy)$_3$)
- Monomer: Methyl Methacrylate (MMA), passed through basic alumina to remove inhibitor.
- Initiator: Ethyl α-bromoisobutyrate (EBiB)
- Co-initiator/Reducing Agent: Triethylamine (TEA), distilled over CaH_2.
- Solvent: Anhydrous Dimethyl Sulfoxide (DMSO) or Acetonitrile (MeCN).
- Equipment:
  - Schlenk flasks or reaction vials with rubber septa.
  - Schlenk line with vacuum and inert gas (N_2 or Ar) supply.
  - Gas-tight syringes.
  - Magnetic stirrer and stir bars.

© 2026 BenchChem. All rights reserved.

- Photoreactor setup: Blue LED strip (λmax = 450-465 nm) wrapped around a beaker or a commercial photoreactor.
- For analysis: Nuclear Magnetic Resonance (NMR) spectrometer, Gel Permeation Chromatography (GPC).

B. Experimental Workflow

Figure 2: Standard workflow for photoredox-mediated radical polymerization.

C. Step-by-Step Procedure

Rationale: Rigorous exclusion of oxygen is the single most critical factor for success. Oxygen is an efficient quencher of the catalyst's triplet excited state, and its presence will completely inhibit polymerization.

- Preparation of Reaction Vessel: To a 25 mL Schlenk flask containing a magnetic stir bar, add fac-Ir(3-tBu-ppy)$_3$ (e.g., 1.5 mg, ~0.002 mmol, for a 10 mL reaction).
- Initial Purge: Seal the flask with a rubber septum, and connect it to a Schlenk line. Evacuate under high vacuum and backfill with inert gas (N_2 or Ar). Repeat this cycle three times to remove atmospheric oxygen from the vessel.
- Addition of Reagents: Under a positive pressure of inert gas, add the following liquids via gas-tight syringe:
  - Anhydrous DMSO (10 mL)
  - Purified MMA (e.g., 2.0 g, 20 mmol)
  - EBiB (e.g., 29 µL, 0.2 mmol, for a target DP of 100)
  - Triethylamine (TEA) (e.g., 28 µL, 0.2 mmol)
- Solution Degassing (Crucial Step): To thoroughly remove dissolved oxygen from the reaction mixture, perform at least three freeze-pump-thaw cycles:
  - Freeze: Immerse the flask in a liquid nitrogen bath until the solution is completely frozen.

© 2026 BenchChem. All rights reserved.

- Pump: Open the flask to the vacuum line for 5-10 minutes.
- Thaw: Close the flask to vacuum, remove it from the liquid nitrogen, and allow it to thaw completely at room temperature. The inert gas atmosphere is re-established.
- Repeat this sequence two more times.

- Initiation: Place the sealed Schlenk flask in the center of the photoreactor setup. Ensure a consistent distance from the light source. Begin vigorous magnetic stirring and turn on the blue LEDs. A fan may be used to maintain room temperature.
- Monitoring: The reaction can be monitored by taking small aliquots (~0.1 mL) at timed intervals using a degassed syringe. The sample is immediately quenched by exposure to air and diluted with $CDCl_3$ for ^1H NMR analysis to determine monomer conversion.
- Termination: Once the desired conversion is reached (or after a set time), simply turn off the light source and open the flask to air. The polymerization will cease immediately.
- Polymer Isolation: Dilute the reaction mixture with a small amount of a good solvent (e.g., THF, acetone) and precipitate the polymer by adding the solution dropwise into a large volume of a cold non-solvent, such as methanol or hexanes.
- Drying: Collect the precipitated polymer by filtration, wash with fresh non-solvent, and dry under vacuum at 40-50 °C until a constant weight is achieved.

D. Characterization

- Monomer Conversion: Calculated from the disappearance of the vinyl proton signals of the monomer relative to an internal standard or the polymer backbone signals in the ^1H NMR spectrum.
- Molecular Weight (Mn) and Polydispersity (Mw/Mn): Determined by Gel Permeation Chromatography (GPC) using a calibrated system. A narrow polydispersity (typically < 1.5) is indicative of a controlled polymerization process.

Troubleshooting and Catalyst Integrity

- Problem: No polymerization occurs.

© 2026 BenchChem. All rights reserved.

- Cause & Solution: The most likely culprit is oxygen contamination. Ensure all degassing steps are performed meticulously. Verify that the light source is emitting at the correct wavelength to excite the catalyst. Check the purity of all reagents, as impurities can act as quenchers.

- Problem: Polymerization is slow or stalls at low conversion.

  - Cause & Solution: Insufficient light intensity can be a factor; ensure the reaction vessel is close to the light source. Catalyst degradation is also possible. Under some conditions, especially with radicophilic ligands or substrates, the photocatalyst itself can undergo side reactions, leading to deactivation.[10] Consider increasing catalyst loading slightly, but prioritize optimizing reaction conditions first.

- Problem: Poor control over molecular weight (broad Mw/Mn).

  - Cause & Solution: This points to issues with the initiator efficiency or chain transfer reactions. Ensure the initiator (e.g., EBiB) is pure and the stoichiometry relative to the monomer is accurate. High temperatures can also lead to a loss of control.

References

- Recyclable iridium-containing copolymers for homogeneous photoredox catalysis. Polymer Chemistry.
- Visible-light photoredox catalysis (fac-*Ir(ppy)3) for synthesis of α-aryl-γ-nitroketones. ResearchGate.
- Installing a Single Monomer within Acrylic Polymers Using Photoredox Catalysis. National Institutes of Health.
- Polymer Chemistry. RSC Publishing.
- Interconversion of fac-Ir(ppy)3 and mer-Ir(ppy)3. ResearchGate.
- Light-Controlled Radical Polymerization: Mechanisms, Methods, and Applications. MIT Open Access Articles.
- The Triplet State of fac-Ir(ppy)3. ACS Publications.
- Preparation of Fac-Tris(2-Phenylpyridinato) Iridium(III). Organic Syntheses.
- Bioinspired Supercharging of Photoredox Catalysis for Applications in Energy and Chemical Manufacturing. Princeton University.
- The use of photoredox catalysis in polymerization. Allied Academies.
- Reinterpreting the Fate of Iridium(III) Photocatalysts. ACS Publications.

© 2026 BenchChem. All rights reserved.

- Heterogeneous Iridium(III) conjugated porous polymer photoredox catalyst based on BODIPY. Digital CSIC.
- Ligand functionalization as a deactivation pathway in a fac-Ir(ppy)3-mediated radical addition. RSC Publishing.
- Oxidative and reductive quenching cycles of photoredox catalysts (PCs). ResearchGate.
- Visible Light-Induced Controlled Radical Polymerization of Methacrylates with Perfluoroalkyl Iodide as the Initiator in Conjugation with a Photoredox Catalyst fac-. ResearchGate. Available at:
- Ir dF(t-Bu)-ppy 3 1380203-57-5. Sigma-Aldrich.
- Electron Density Difference Analysis on the Oxidative and Reductive Quenching Cycles of Classical Iridium and Ruthenium Photoredox Catalysts. PubMed.
- (A) Reductive quenching vs. oxidative quenching cycle, (B) formation of EY in PBS solution, (C) proposed mechanism. ResearchGate.
- Oxidative and reductive quenching cycles of PCs (Sub: substrate). ResearchGate.

Need Custom Synthesis?

BenchChem offers custom synthesis for rare earth carbides and specific isotopiclabeling.

Email: info@benchchem.com or Request Quote Online.

Sources

- 1. macmillan.princeton.edu [macmillan.princeton.edu]
- 2. alliedacademies.org [alliedacademies.org]
- 3. orgsyn.org [orgsyn.org]
- 4. pubs.acs.org [pubs.acs.org]
- 5. par.nsf.gov [par.nsf.gov]
- 6. Electron Density Difference Analysis on the Oxidative and Reductive Quenching Cycles of Classical Iridium and Ruthenium Photoredox Catalysts - PubMed [pubmed.ncbi.nlm.nih.gov]
- 7. researchgate.net [researchgate.net]
- 8. researchgate.net [researchgate.net]

© 2026 BenchChem. All rights reserved.

- 9. Installing a Single Monomer within Acrylic Polymers Using Photoredox Catalysis - PMC [pmc.ncbi.nlm.nih.gov]
- 10. Ligand functionalization as a deactivation pathway in a fac-Ir(ppy)3-mediated radical addition - Chemical Science (RSC Publishing) [pubs.rsc.org]
- To cite this document: BenchChem. [Application Notes & Protocols: fac-Ir(3-tBu-ppy)$_3$ in Radical Polymerization]. BenchChem, [2026]. [Online PDF]. Available at: [https://www.benchchem.com/product/b13777768/docs#application-notes-protocols-fac-ir-3-tbu-ppy-in-radical-polymerization]

Disclaimer & Data Validity:

The information provided in this document is for Research Use Only (RUO) and is strictly not intended for diagnostic or therapeutic procedures. While BenchChem strives to provide accurate protocols, we make no warranties, express or implied, regarding the fitness of this product for every specific experimental setup.

Technical Support: The protocols provided are for reference purposes. Unsure if this reagent suits your experiment?

Need Industrial/Bulk Grade? Request Custom Synthesis Quote

BenchChem

Our mission is to be the trusted global source of essential and advanced chemicals, empowering scientists and researchers to drive progress in science and industry.

Contact

Address: 3281 E Guasti Rd

Ontario, CA 91761, United States

Phone: (601) 213-4426

Email: info@benchchem.com

Contact our Ph.D. Support Team for a compatibility check

© 2026 BenchChem. All rights reserved.