Strategic Utilization of the Benzyl Protecting Group in Piperidine Synthesis

Author: BenchChem Technical Support Team. **Date**: May 2026

Compound of Interest

Compound Name:	*(1-Benzyl-4,4-difluoropiperidin-3-YL)methanol*
CAS No.:	*1303973-25-2*
Cat. No.:	*B1376438*

Get Quote

Executive Summary

In the architecture of piperidine-based pharmacophores—found in blockbusters like Donepezil, Fentanyl, and Ritalin—the choice of nitrogen protection is rarely a binary decision of "on/off." While carbamates (Boc, Cbz, Fmoc) offer electronic deactivation, the Benzyl (Bn) group stands apart as a "participatory" protecting group.

This guide moves beyond basic benzylation protocols to analyze the strategic utility of the N-benzyl motif. We examine its role in conformational locking, its unique orthogonality to both acid- and base-labile groups, and the mechanistic nuances of its removal when catalytic hydrogenation is chemically forbidden.

Chemo-Physical Rationale: The "Active" Protecting Group

Unlike carbamates, which convert a basic amine into a neutral species with restricted rotation (due to

resonance), the N-benzyl group maintains the amine's basicity and

hybridization. This distinction is critical for synthetic planning.

Conformational Locking

The N-benzyl group exerts a profound stereoelectronic influence on the piperidine ring. Due to 1,3-diaxial interactions, the bulky benzyl group overwhelmingly prefers the equatorial position (

kcal/mol).

- Impact: This locks the piperidine chair conformation, forcing substituents at C2, C3, or C4 into fixed axial or equatorial orientations.
- Application: When performing nucleophilic additions to a C4-ketone (e.g., in the synthesis of 4-substituted piperidines), the N-Bn group dictates the trajectory of the incoming nucleophile, often enhancing diastereoselectivity compared to the more flexible N-Boc analogs.

Orthogonality Matrix

The N-Bn group is unique in its resistance to both strong acids and strong bases/nucleophiles, creating a "safety window" for harsh intermediate steps.

Reagent/Condition	N-Benzyl (Bn)	N-Boc	N-Cbz	N-Fmoc
TFA / HCl (Anhydrous)	Stable	Cleaved	Stable	Stable
LiAlH4 / NaBH4	Stable	Reduced*	Stable	Cleaved
NaH / KOtBu (Strong Base)	Stable	Stable	Unstable	Cleaved
H2 / Pd-C	Cleaved	Stable	Cleaved	Stable
R-Li (Organolithiums)	Stable	Directed Lithiation	Attack	Attack

*Note: N-Boc can be reduced to N-Methyl under aggressive hydride conditions.

© 2026 BenchChem. All rights reserved.

Visualizing Orthogonality Logic

The following decision logic illustrates when to deploy N-Bn over N-Boc based on downstream synthetic requirements.

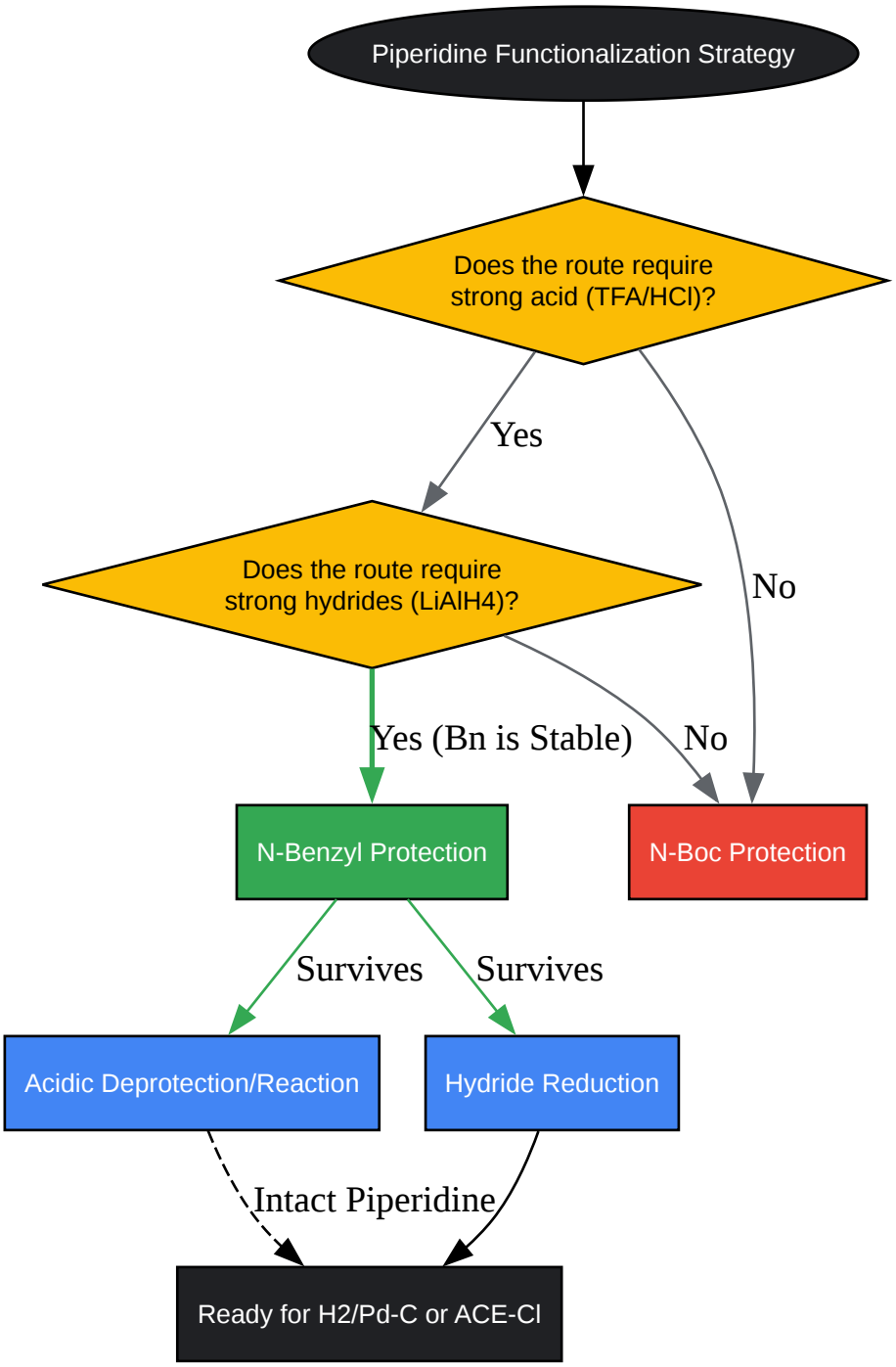

Click to download full resolution via product page

© 2026 BenchChem. All rights reserved.

Figure 1: Decision logic for selecting N-Benzyl protection based on chemo-stability requirements.

Deprotection Strategies: The Exit Plan

While installation is trivial (reductive amination or alkylation), deprotection requires strategic foresight. There are two primary workflows: Catalytic Hydrogenolysis (Standard) and Chloroformate Dealkylation (Specialized).

Method A: Catalytic Hydrogenolysis

The "Gold Standard" for clean removal.

- Mechanism: Oxidative insertion of Pd into the benzylic C-N bond followed by hydrogenolysis.
- Limitations: Cannot be used if the molecule contains reducible olefins, nitro groups, or aryl halides (which will undergo hydrodehalogenation).

Method B: ACE-Cl (1-Chloroethyl chloroformate)

When hydrogenation is impossible (e.g., preserving an alkene), ACE-Cl is the reagent of choice. It operates via a von Braun-type degradation mechanism but under much milder conditions than cyanogen bromide.

Mechanism of ACE-Cl Deprotection

- Acylation: The tertiary amine attacks the ACE-Cl carbonyl, forming a quaternary ammonium species.
- Dealkylation: Chloride ion attacks the benzylic position (SN2), releasing Benzyl Chloride and the carbamate.
- Methanolysis: Heating in methanol decomposes the carbamate into the free amine, acetaldehyde, and CO2.

© 2026 BenchChem. All rights reserved.

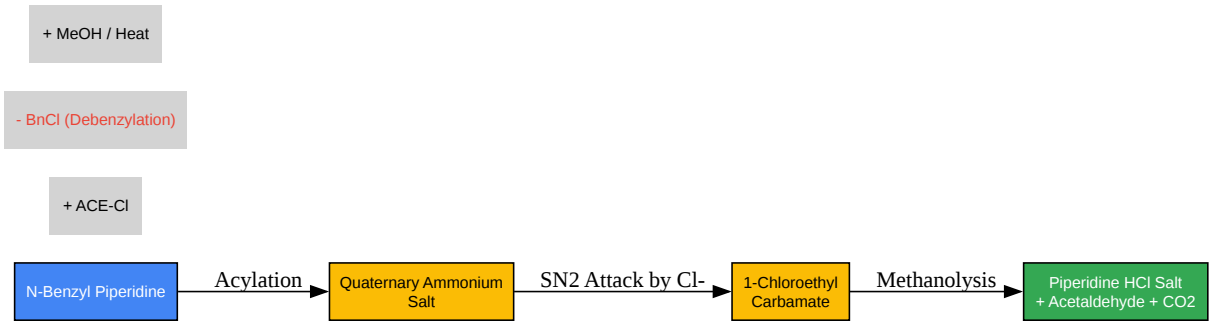

Click to download full resolution via product page

Figure 2: Mechanistic pathway of ACE-Cl mediated debenzylation, preserving reducible functionalities.

Experimental Protocols

Protocol: Reductive Amination (Installation)

Standard procedure for introducing the Bn group using Benzaldehyde and STAB (Sodium Triacetoxyborohydride).

- Preparation: Charge a reaction vessel with the secondary piperidine derivative (1.0 equiv) and DCM (0.2 M).
- Addition: Add Benzaldehyde (1.1 equiv) and stir for 15 min to form the iminium ion.
- Reduction: Cool to 0°C. Add STAB (1.5 equiv) portion-wise.
  - Note: STAB is preferred over NaBH4 to prevent reduction of the aldehyde to benzyl alcohol before amination.
- Quench: Stir at RT for 4–12 h. Quench with sat. NaHCO3.
- Workup: Extract with DCM, dry over Na2SO4, and concentrate.

© 2026 BenchChem. All rights reserved.

Protocol: ACE-Cl Deprotection (The "Hard" Way)

Use this when Pd/C is contraindicated.

- Acylation: Dissolve N-benzyl piperidine (1.0 mmol) in anhydrous 1,2-dichloroethane (DCE) (5 mL).
- Reagent: Add ACE-Cl (1.2–1.5 equiv) dropwise at 0°C under inert atmosphere (N2/Ar).
- Reflux 1: Heat to reflux (83°C) for 3–12 h. Monitor by TLC/LCMS for disappearance of starting material.
    - Checkpoint: You are forming the carbamate intermediate. The benzyl group is lost as benzyl chloride.
- Concentration: Cool and concentrate in vacuo to remove excess ACE-Cl and DCE.
- Methanolysis: Redissolve the crude carbamate residue in MeOH (5 mL).
- Reflux 2: Reflux for 1–2 h.
    - Chemistry: This step cleaves the chloroethyl carbamate.
- Isolation: Concentrate to yield the piperidine hydrochloride salt.

References

- Greene's Protective Groups in Organic Synthesis. Wuts, P. G. M. (2014). John Wiley & Sons.
- Selective Deprotection of N-Benzyl Amines by ACE-Cl. Olofson, R. A., et al. (1984). Journal of Organic Chemistry.[1]
- Conformational Analysis of Piperidines. Eliel, E. L. (1970). Angewandte Chemie International Edition.
- Lithiation of N-Boc vs N-Bn Piperidines. Beak, P., & Lee, W. K. (1989). Tetrahedron Letters.
- Role of N-Benzyl in Drug Discovery.National Institutes of Health (NIH) / PubMed.

© 2026 BenchChem. All rights reserved.

Need Custom Synthesis?

BenchChem offers custom synthesis for rare earth carbides and specific isotopiclabeling.

Email: info@benchchem.com or Request Quote Online.

Sources

- 1. pubs.acs.org [pubs.acs.org]
- To cite this document: BenchChem. [Strategic Utilization of the Benzyl Protecting Group in Piperidine Synthesis]. BenchChem, [2026]. [Online PDF]. Available at: [https://www.benchchem.com/product/b1376438/docs#strategic-utilization-of-the-benzyl-protecting-group-in-piperidine-synthesis]

Disclaimer & Data Validity:

The information provided in this document is for Research Use Only (RUO) and is strictly not intended for diagnostic or therapeutic procedures. While BenchChem strives to provide accurate protocols, we make no warranties, express or implied, regarding the fitness of this product for every specific experimental setup.

Technical Support: The protocols provided are for reference purposes. Unsure if this reagent suits your experiment?

Need Industrial/Bulk Grade? Request Custom Synthesis Quote

BenchChem

Our mission is to be the trusted global source of essential and advanced chemicals, empowering scientists and researchers to drive progress in science and industry.

Contact

Address: 3281 E Guasti Rd

Ontario, CA 91761, United States

Phone: (601) 213-4426

Email: info@benchchem.com

© 2026 BenchChem. All rights reserved.

Contact our Ph.D. Support Team for a compatibility check

© 2026 BenchChem. All rights reserved.