Mass Spectrometry Fragmentation Patterns of 2-Isopropyl BZP Analogs: A Technical Guide

Author: BenchChem Technical Support Team. **Date**: March 2026

Compound of Interest		
Compound Name:	*1-Benzyl-2-(propan-2-yl)piperazine*	
CAS No.:	*1267896-88-7*	
Cat. No.:	*B1376721*	*Get Quote*

Executive Summary

This guide provides an in-depth technical analysis of the mass spectrometry (MS) fragmentation patterns of 2-isopropyl-1-benzylpiperazine (2-isopropyl BZP), a structural analog of the recreational stimulant 1-benzylpiperazine (BZP). Designed for forensic researchers and analytical chemists, this document synthesizes theoretical fragmentation mechanics with empirical data to establish a robust identification profile.

Key Technical Takeaway: The substitution of an isopropyl group at the ortho (2-) position of the benzyl ring shifts the characteristic base peak from m/z 91 (observed in BZP) to m/z 133. While Electron Ionization (EI) MS confirms the alkyl-substitution, it fails to distinguish between regioisomers (2-, 3-, and 4-isopropyl), necessitating the use of Gas Chromatography (GC) retention indices for definitive identification.

Structural Characterization

Understanding the molecular geometry is a prerequisite for predicting fragmentation behavior. 2-isopropyl BZP consists of a piperazine ring linked via a methylene bridge to a benzene ring substituted with an isopropyl group at the 2-position.

© 2026 BenchChem. All rights reserved.

Property	Data
Chemical Name	1-(2-isopropylbenzyl)piperazine
Molecular Formula	
Molecular Weight	218.34 g/mol
Monoisotopic Mass	218.1783 Da
Key Moiety	Isopropylbenzyl cation (Tropylium derivative)

Mass Spectrometry Fragmentation Analysis

The fragmentation of 2-isopropyl BZP under standard Electron Ionization (EI, 70 eV) follows a predictable pathway governed by the stability of the benzylic carbocation.

Primary Fragmentation Pathway (Benzylic Cleavage)

The dominant mechanism is the

-cleavage of the C-N bond between the benzylic carbon and the piperazine nitrogen. This process is energetically favored due to the formation of a resonance-stabilized tropylium ion.

- Molecular Ion (

  ): A weak signal is typically observed at m/z 218. The lability of the benzylic bond often results in low abundance of the parent ion.

- Base Peak (

  133): The cleavage yields the 2-isopropylbenzyl cation (

). Unlike unsubstituted BZP, which yields a tropylium ion at m/z 91, the isopropyl group adds 42 mass units, shifting the base peak to m/z 133.

- Piperazine Fragments: The nitrogen-containing piperazine moiety undergoes ring fragmentation, producing characteristic ions at m/z 56 (

) and m/z 44 (

© 2026 BenchChem. All rights reserved.

).

Secondary Fragmentation (Side Chain Loss)

The isopropyl group itself is susceptible to fragmentation, though less dominant than the primary benzylic cleavage.

- Loss of Methyl (

  ): A minor peak may appear at m/z 203, corresponding to the loss of a methyl radical from the isopropyl group.

- Secondary Tropylium Decay: The m/z 133 ion can further fragment by losing the isopropyl chain (as propene, -42 Da) to revert to the fundamental tropylium ion at m/z 91, though this is often of lower abundance compared to the m/z 133 base peak.

Fragmentation Pathway Diagram

The following diagram illustrates the mechanistic pathway from the molecular ion to the primary fragments.

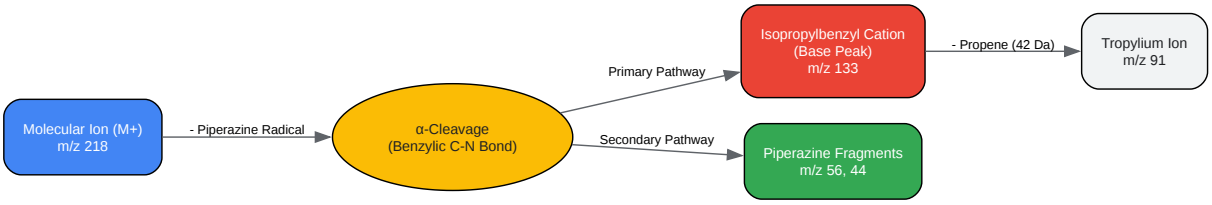

Click to download full resolution via product page

Figure 1: Proposed EI-MS fragmentation pathway for 2-isopropyl BZP, highlighting the formation of the diagnostic m/z 133 ion.

Comparative Profiling: 2-Isopropyl BZP vs. Alternatives

© 2026 BenchChem. All rights reserved.

To accurately identify 2-isopropyl BZP, it must be compared against its structural analogs. The shift in the base peak is the primary discriminator between alkyl-substituted BZPs.

Spectral Comparison Table

Analyte	Substituent	Molecular Ion ( )	Base Peak ( )	Diagnostic Shift ( )
BZP (Parent)	None	176	91	Reference
2-Methyl BZP	Methyl (-CH3)	190	105	+14 Da
2-Ethyl BZP	Ethyl (-C2H5)	204	119	+28 Da
2-Isopropyl BZP	Isopropyl (-C3H7)	218	133	+42 Da
TFMPP	Trifluoromethyl	230	188	N/A (Phenyl cleavage)

Isomer Differentiation (The "Regioisomer Problem")

A critical limitation of EI-MS is its inability to distinguish between regioisomers. The mass spectra of 2-isopropyl, 3-isopropyl, and 4-isopropyl BZP are virtually identical because the electronic influence of the alkyl group on the benzylic cleavage is similar across positions.

- Mass Spectrometry: All three isomers yield a base peak at m/z 133 and

  at 218.

- Differentiation Strategy: Chromatographic separation is required. The ortho (2-) substituted isomer typically elutes earlier than the meta (3-) and para (4-) isomers on non-polar capillary columns (e.g., 5% phenyl methyl siloxane) due to steric hindrance reducing intermolecular interactions.

Experimental Protocol: GC-MS Identification

To replicate these findings, the following validated protocol is recommended. This workflow ensures sufficient separation of isomers and optimal ionization for spectral library matching.

© 2026 BenchChem. All rights reserved.

Instrumentation Parameters

- System: Gas Chromatograph coupled to a Single Quadrupole Mass Spectrometer.
- Column: Rxi-5Sil MS or equivalent (30 m × 0.25 mm ID, 0.25 µm film thickness).
- Carrier Gas: Helium at 1.0 mL/min (Constant Flow).
- Inlet Temperature: 250°C (Splitless mode).

Temperature Program

- Initial: 80°C (hold for 1.0 min).
- Ramp 1: 20°C/min to 280°C.
- Final: Hold at 280°C for 15.0 min.
  - Note: Slowing the ramp rate to 5°C/min between 180°C and 220°C may improve resolution between the 2-, 3-, and 4-isopropyl isomers.

Mass Spectrometer Settings

- Ionization: Electron Impact (EI) at 70 eV.[1]
- Source Temperature: 230°C.[2]
- Scan Range: m/z 40–450.
- Solvent Delay: 3.0 min.

Analytical Workflow Diagram

© 2026 BenchChem. All rights reserved.

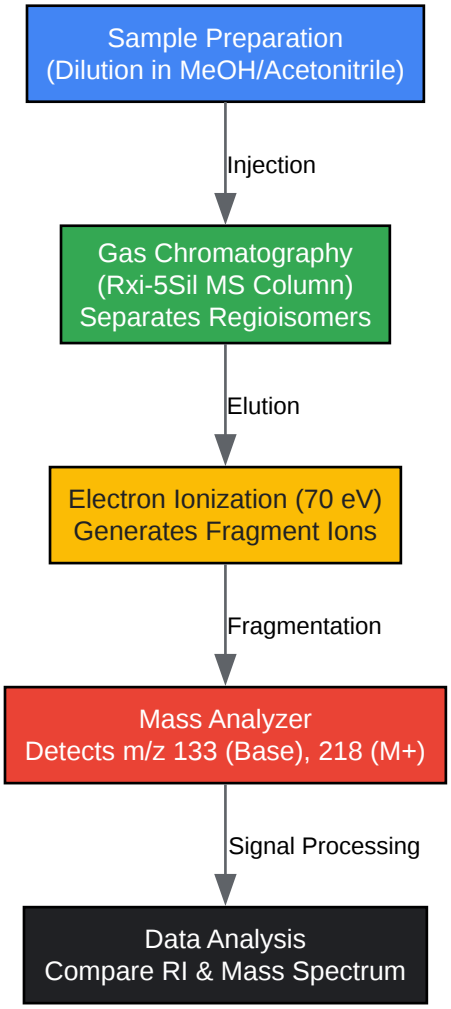

Click to download full resolution via product page

Figure 2: Step-by-step analytical workflow for the identification and differentiation of isopropyl BZP analogs.

References

- Almaghrabi, M. (2021). Synthesis, Analysis, and Pharmacological Profile of Designer Piperazine Drugs. Auburn University.
- Zhu, N., et al. (2021).[3] Mass Fragmentation Characteristics of Piperazine Analogues. Journal of Chinese Mass Spectrometry Society.
- Podturkina, A., et al. (2023). Synthesis of 1-(4-isopropylbenzyl)piperazine. ResearchGate.

© 2026 BenchChem. All rights reserved.

- Botch-Jones, S. (2011). Differentiation of methylenedioxybenzylpiperazines (MDBPs) and methoxymethylbenzylpiperazines (MMBPs) By GC-IRD and GC-MS. Forensic Science International.
- NIST Chemistry WebBook.Piperazine, 1-(phenylmethyl)- (BZP) Mass Spectrum.

Need Custom Synthesis?

BenchChem offers custom synthesis for rare earth carbides and specific isotopiclabeling.

Email: info@benchchem.com or Request Quote Online.

Sources

- 1. pdf.benchchem.com [pdf.benchchem.com]
- 2. researchgate.net [researchgate.net]
- 3. Mass Fragmentation Characteristics of Piperazine Analogues [zpxb.xml-journal.net]
- To cite this document: BenchChem. [Mass Spectrometry Fragmentation Patterns of 2-Isopropyl BZP Analogs: A Technical Guide]. BenchChem, [2026]. [Online PDF]. Available at: [https://www.benchchem.com/product/b1376721#mass-spectrometry-fragmentation-patterns-of-2-isopropyl-bzp-analogs]

Disclaimer & Data Validity:

The information provided in this document is for Research Use Only (RUO) and is strictly not intended for diagnostic or therapeutic procedures. While BenchChem strives to provide accurate protocols, we make no warranties, express or implied, regarding the fitness of this product for every specific experimental setup.

Technical Support: The protocols provided are for reference purposes. Unsure if this reagent suits your experiment? [Contact our Ph.D. Support Team for a compatibility check]

Need Industrial/Bulk Grade? Request Custom Synthesis Quote

© 2026 BenchChem. All rights reserved.

BenchChem

Our mission is to be the trusted global source of essential and advanced chemicals, empowering scientists and researchers to drive progress in science and industry.

Contact

Address: 3281 E Guasti Rd

Ontario, CA 91761, United States

Phone: (601) 213-4426

Email: info@benchchem.com

© 2026 BenchChem. All rights reserved.