# Troubleshooting low conversion in Corey aldehyde olefination

**Author**: BenchChem Technical Support Team. **Date**: May 2026

***Compound of Interest***

*Compound Name:* *Corey aldehyde benzoate*

*Cat. No.:* *B13724944*

*Get Quote*

## Technical Support Center: Corey Aldehyde Olefination

### Topic: Troubleshooting Low Conversion & Yield Optimization

Ticket ID: CF-OPT-2024 Assigned Specialist: Senior Application Scientist, Process Chemistry Division[1]

## Executive Summary

You are experiencing low conversion or poor isolation yields in the Corey-Fuchs reaction (conversion of aldehydes to terminal alkynes). This transformation occurs in two distinct phases:

- Gem-dibromoolefin Synthesis: A Wittig-type reaction using carbon tetrabromide (

  ) and triphenylphosphine (

  ).[1][2][3][4]

- Alkyne Formation: Lithium-halogen exchange followed by Fritsch-Buttenberg-Wiechell rearrangement using

  -BuLi.[1][3][5]

Low conversion is most frequently caused by moisture-induced ylide quenching in Step 1 or steric hindrance preventing the betaine formation.[1] "Low yield" is often a purification artifact caused by the difficulty of removing triphenylphosphine oxide (TPPO).[1]

# Module 1: Diagnostic & Mechanism Analysis

Before altering your protocol, identify the failure point using this mechanistic flow.

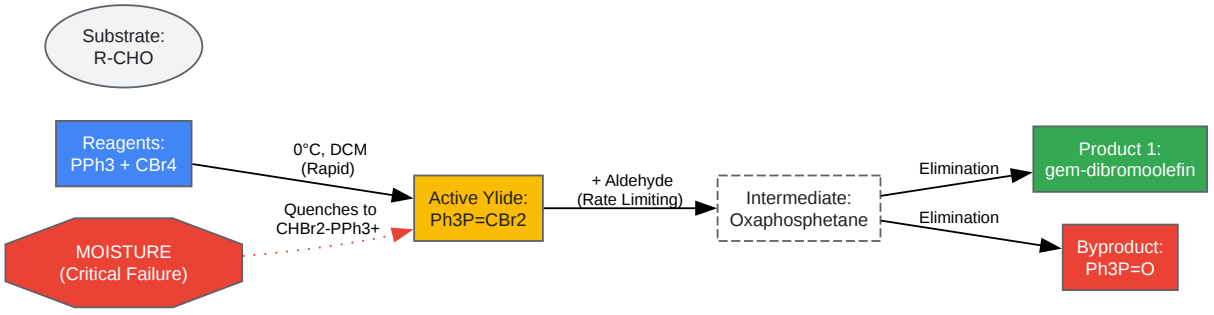


Click to download full resolution via product page

Figure 1: Mechanistic pathway of Step 1. Note that the active ylide is highly moisture-sensitive.[1]

# Module 2: Troubleshooting Step 1 (The Dibromoolefin)

Issue: "I see unreacted aldehyde after 4 hours."

## Root Cause 1: Ylide Hydrolysis (The "Wet Solvent" Trap)

The dibromomethylene ylide is generated in situ. If your Dichloromethane (DCM) contains even trace water (>50 ppm), the ylide protonates immediately, rendering it inactive.[1]

- Solution: Distill DCM over

  or use a fresh solvent purification system (SPS) tap.[1]

- Visual Check: The reaction mixture should turn a distinct orange/red color upon mixing

  and

  . If it remains pale yellow, your ylide concentration is too low.[1]

## Root Cause 2: Stoichiometry Mismatch

The standard 1:1:2 ratio (

) is often insufficient for complete conversion due to the rapid consumption of

by adventitious moisture or side reactions.

Recommended Stoichiometry Table:

| **Component** | **Standard Eq.** | Optimized Eq. | **Role** |
|---|---|---|---|
| Aldehyde | 1.0 | 1.0 | Limiting Reagent |
| | 1.0 | 2.0 | Carbon Source |
| | 2.0 | 4.0 | Ylide Gen. + Bromine Scavenger |
| Zn Dust | N/A | 2.0 | Ramirez Modification (See below) |

## Root Cause 3: Steric Bulk (The Ramirez Modification)

If your aldehyde is hindered or electron-rich, the standard Corey-Fuchs conditions may be too slow, leading to decomposition.[1]

- The Fix: Switch to the Ramirez Modification.
- Why it works: Adding Zinc dust reduces the amount of

© 2026 BenchChem. All rights reserved.

required (or regenerates active species) and significantly accelerates the reaction rate, often finishing in <1 hour at 0°C.

### Protocol: Ramirez Modification (High Efficiency)

- Dissolve

  (2.0 eq) and

  (2.0 eq) in dry DCM (0.1 M).

- Add activated Zinc dust (2.0 eq).[1] Stir at 23°C for 15 mins (Solution turns dark).

- Add Aldehyde (1.0 eq).[1][6]

- Monitor by TLC.[1] Reaction is usually complete in 30–60 mins.[1]

## Module 3: Troubleshooting Step 2 (Alkyne Formation)

Issue: "I formed the dibromoolefin, but the alkyne yield is low."

## FAQ: Why am I getting side products?

- Incomplete Lithiation: You need 2.0 equivalents of

  -BuLi minimum.[1]

  - Eq 1: Lithium-halogen exchange.[1]

  - Eq 2: Deprotonation of the formed terminal alkyne (the proton is acidic).

- Temperature Spikes: The rearrangement involves a carbenoid intermediate.[1] If the temperature rises above -78°C too early, you may get dimerization or polymerization.[1]

Step 2 Optimization Protocol:

- Dissolve gem-dibromoolefin in dry THF at -78°C.

- Add

© 2026 BenchChem. All rights reserved.

-BuLi (2.1 eq) dropwise.[1]

- Stir 1 hour at -78°C, then warm to 0°C for 1 hour.
- Quench:
  - For terminal alkyne: Add saturated

    .[1]
  - For internal alkyne: Add electrophile (e.g., MeI) before hydrolysis.[1]

# Module 4: Purification (The TPPO Nightmare)

Issue: "My NMR is a mess of aromatic peaks. I can't find my product." Diagnosis: You are likely struggling to remove Triphenylphosphine Oxide (TPPO).[1][7] It streaks on silica and co-elutes with non-polar products.[1]

## Solution A: The Hexane Crash-Out[1]

- Concentrate the crude reaction mixture to a thick oil.
- Vigorously stir with cold Hexanes or Pentane (TPPO is insoluble).
- Filter the white precipitate (TPPO) through a celite pad.[1]
- Concentrate the filtrate.[1][6]

## Solution B: Zinc Chloride Complexation

If Hexane precipitation fails, use coordination chemistry.[1]

- Dissolve crude in minimal DCM or Toluene.[1]
- Add anhydrous

  (approx 2 eq relative to TPPO).[1]
- Stir for 1 hour. A bulky

© 2026 BenchChem. All rights reserved.

complex will precipitate.[1]

- Filter and concentrate.

# Troubleshooting Decision Tree

Use this logic flow to determine your next experiment.

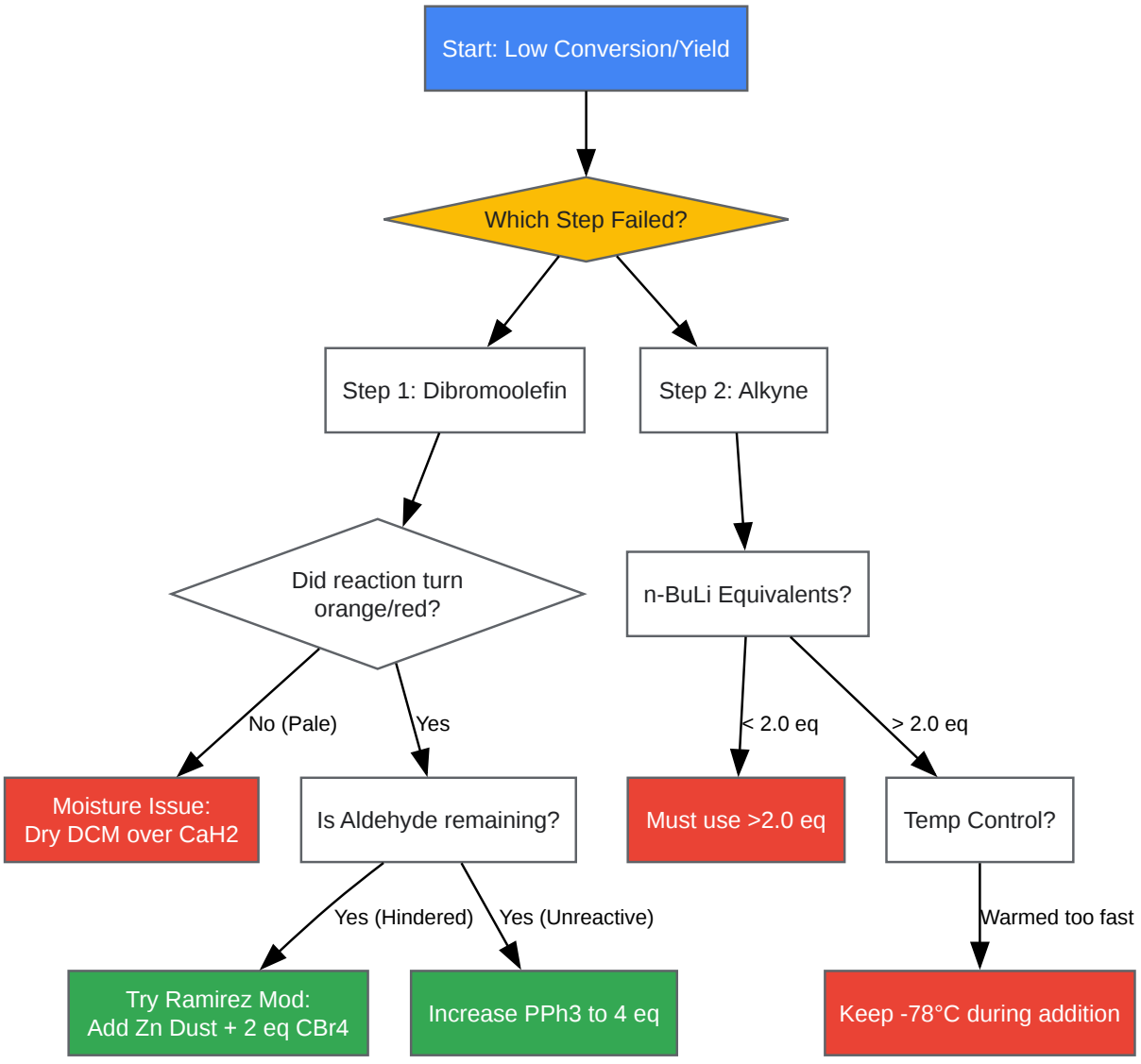


Click to download full resolution via product page

Figure 2: Decision logic for optimizing reaction conditions.

© 2026 BenchChem. All rights reserved.

## References


- Corey, E. J., & Fuchs, P. L. (1972).[1][3][4][8] A synthetic method for the conversion of aldehydes to acetylenes.[2][3][5][9][10] Tetrahedron Letters, 13(36), 3769–3772.[1] [1]
- Desai, N. B., McKelvie, N., & Ramirez, F. (1962).[1] A New Synthesis of 1,1-Dibromoolefins via Phosphine-Dibromomethylenes. Journal of the American Chemical Society, 84(9), 1745–1747.[1]
- Grandjean, D., Pale, P., & Chuche, J. (1991).[1] An improved procedure for the preparation of 1,1-dibromoalkenes.[1][9] Tetrahedron Letters, 35(21), 3529-3530.[1] [1]
- Bates, R. W., et al. (2002).[1] Removal of Triphenylphosphine Oxide by Precipitation with Zinc Chloride.[1][11] The Journal of Organic Chemistry, 67(26), 9154–9161.[1] [1]


***Need Custom Synthesis?***

*BenchChem offers custom synthesis for rare earth carbides and specific isotopiclabeling.*

*Email: info@benchchem.com or Request Quote Online.*

## Sources


- 1. researchgate.net [researchgate.net]
- 2. scribd.com [scribd.com]
- 3. researchgate.net [researchgate.net]
- 4. researchgate.net [researchgate.net]
- 5. Corey-Fuchs Reaction [organic-chemistry.org]
- 6. Corey-Fuchs Homologation | NROChemistry [nrochemistry.com]
- 7. scientificupdate.com [scientificupdate.com]
- 8. Corey-Fuchs_reaction [chemeurope.com]
- 9. Corey–Fuchs reaction - Wikipedia [en.wikipedia.org]
- 10. Corey-Fuchs Alkyne Synthesis | Chem-Station Int. Ed. [en.chem-station.com]
- 11. pubs.acs.org [pubs.acs.org]

- To cite this document: BenchChem. [Troubleshooting low conversion in Corey aldehyde olefination]. BenchChem, [2026]. [Online PDF]. Available at: [https://www.benchchem.com/product/b13724944/docs#troubleshooting-low-conversion-in-corey-aldehyde-olefination]

---

**Disclaimer & Data Validity:**

The information provided in this document is for Research Use Only (RUO) and is strictly not intended for diagnostic or therapeutic procedures. While BenchChem strives to provide accurate protocols, we make no warranties, express or implied, regarding the fitness of this product for every specific experimental setup.

**Technical Support:**The protocols provided are for reference purposes. Unsure if this reagent suits your experiment?

**Need Industrial/Bulk Grade?** Request Custom Synthesis Quote

BenchChem

Our mission is to be the trusted global source of essential and advanced chemicals, empowering scientists and researchers to drive progress in science and industry.

Contact

Address: 3281 E Guasti Rd

Ontario, CA 91761, United States

Phone: (601) 213-4426

Email: info@benchchem.com

Contact our Ph.D. Support Team for a compatibility check