Comparative study of leaving group ability of substituted benzenesulfonyl chlorides

Author: BenchChem Technical Support Team. **Date**: May 2026

Compound of Interest

Compound Name:	*5-Tert-butyl-2,3-dimethylbenzenesulfonyl chloride*
CAS No.:	*339370-16-0*
Cat. No.:	*B1371581*

Get Quote

Comparative Study: Leaving Group Ability of Substituted Benzenesulfonyl Chlorides

Executive Summary

In drug discovery and complex organic synthesis, converting a hydroxyl group into a viable leaving group is a critical activation step. While p-Toluenesulfonyl chloride (TsCl) is the industry standard due to cost and stability, it often fails with sterically hindered or electron-deficient substrates.

This study compares TsCl with its electron-deficient analogs—p-Bromobenzenesulfonyl chloride (BsCl) and p-Nitrobenzenesulfonyl chloride (NsCl)—demonstrating how electronic modulation of the benzene ring directly influences the rate of nucleophilic substitution (

) and the stability of the intermediate sulfonate ester.

Key Finding: The leaving group ability follows the Hammett relationship, where electron-withdrawing groups (EWG) significantly accelerate solvolysis and displacement rates by

© 2026 BenchChem. All rights reserved.

stabilizing the anionic charge on the departing sulfonate.

Mechanistic Basis & Electronic Effects[1][2]

The efficacy of a sulfonate leaving group (

) is governed by the stability of the sulfonate anion (

) released during the transition state. This stability correlates linearly with the acidity (

) of the conjugate sulfonic acid.

The Hammett Correlation

The rate of substitution depends on the substituent (

) on the benzene ring. According to the Hammett equation:

- (Substituent Constant): Positive for EWGs (

  ,

  ), indicating electron withdrawal.
- (Reaction Constant): Typically positive (+1.0 to +2.0) for sulfonate displacements, meaning EWGs accelerate the reaction.

Structural Comparison

Reagent	Abbr.	Substituent (Para)	Electronic Effect	Leaving Group Ability	Stability (Hydrolysis)
Tosyl Chloride	TsCl		Electron Donating (+I)	Good (Baseline)	High
Brosyl Chloride	BsCl		Weak Withdrawing (-I)	Better (~3-4x Ts)	Moderate
Nosyl Chloride	NsCl		Strong Withdrawing (-M, -I)	Excellent (~100-1000x Ts)	Low (Moisture Sensitive)

© 2026 BenchChem. All rights reserved.

Comparative Performance Data

The following data normalizes the solvolysis rates relative to the mesylate or tosylate group. Note that while Triflate (

) is the "gold standard" for reactivity, it is non-aromatic and extremely unstable; Nosylates offer a "sweet spot" of high reactivity with manageable stability.[1]

Table 1: Relative Solvolysis Rates ( )

Data derived from solvolysis in ethanol/water and acetolysis studies.

Leaving Group	Structure	(Approx.)	(Conjugate Acid)
Mesylate (Ms)		1.00	-1.9
Tosylate (Ts)		0.70	-2.8
Brosylate (Bs)		~2.6 - 4.0	-4.0
Nosylate (Ns)		> 100	-9.0
Triflate (Tf)		> 10,000	-14.0

> *Interpretation: If a displacement reaction on a Tosylate requires harsh heating (leading to decomposition), switching to a Nosylate can often allow the reaction to proceed at room temperature due to the massive rate acceleration.*

Experimental Protocols

General Selection Guide (Decision Tree)

© 2026 BenchChem. All rights reserved.

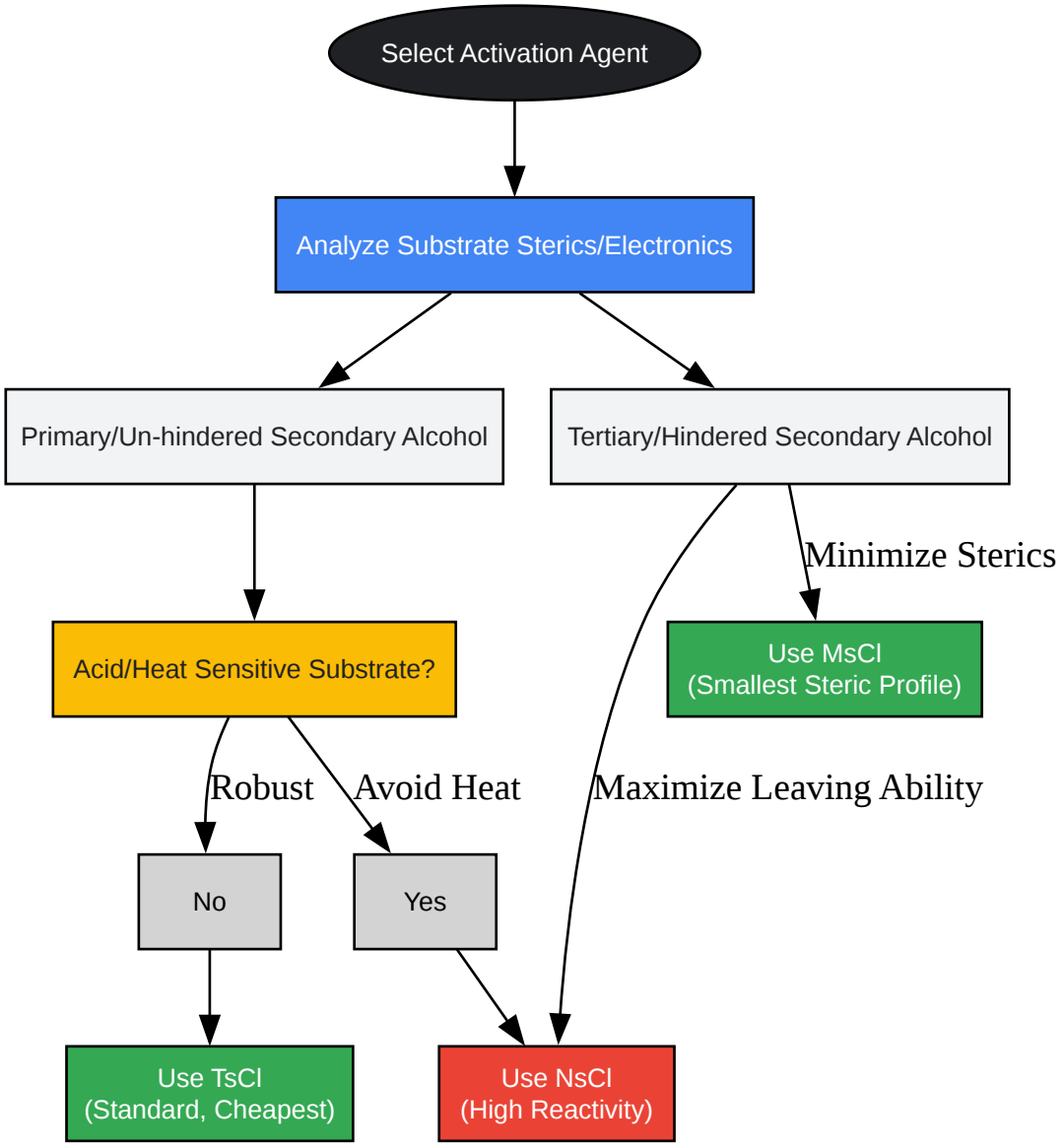

Click to download full resolution via product page

Caption: Decision matrix for selecting sulfonyl chlorides based on substrate constraints.

Protocol A: Standard Tosylation (Robust)

Application: Primary alcohols, unhindered secondary alcohols. Rationale: Pyridine serves as both solvent and base, neutralizing the HCl byproduct.

- Setup: Flame-dry a round-bottom flask equipped with a magnetic stir bar under atmosphere.

© 2026 BenchChem. All rights reserved.

- Dissolution: Dissolve alcohol (1.0 equiv) in anhydrous pyridine (0.5 M concentration).
- Addition: Cool to 0°C. Add TsCl (1.2 - 1.5 equiv) portion-wise over 10 minutes.
  - Expert Tip: TsCl is often contaminated with TsOH. Recrystallize from

    /petroleum ether if the reagent is old.
- Reaction: Allow to warm to Room Temperature (RT) and stir for 3–12 hours. Monitor by TLC.
- Workup: Pour into ice-water. Extract with

  . Wash organic layer with 1M

  (to remove pyridine), saturated

  , and brine. Dry over

  .

Protocol B: Nosylation (High Reactivity)

Application: Deactivated alcohols, heat-sensitive substrates, or when subsequent displacement is difficult. Rationale: NsCl is more reactive and more prone to hydrolysis. A biphasic system or strictly anhydrous

with a stronger base (

) is preferred over pyridine to prevent side reactions.

- Setup: Flame-dry flask under

  .
- Dissolution: Dissolve alcohol (1.0 equiv) and

  (1.5 equiv) in anhydrous

  (0.2 M). Add catalytic DMAP (0.1 equiv).
- Addition: Cool to 0°C. Add NsCl (1.2 equiv) dissolved in a small amount of

© 2026 BenchChem. All rights reserved.

dropwise.

- Critical Control: Do not let the temperature rise above 5°C during addition. The electron-deficient ring makes NsCl highly electrophilic; rapid addition can cause exotherms that degrade the reagent.

- Reaction: Stir at 0°C for 1 hour, then allow to reach RT. Reaction is usually complete within 2 hours (significantly faster than TsCl).

- Workup: Quench with saturated

  . Extract with

  . Do not wash with strong acid, as nosylates can be sensitive. Use dilute citric acid if neutralization is needed.

Reaction Mechanism Visualized

The activation and subsequent displacement follow a defined pathway. The diagram below illustrates the electronic influence of the 'R' group on the transition state energy.

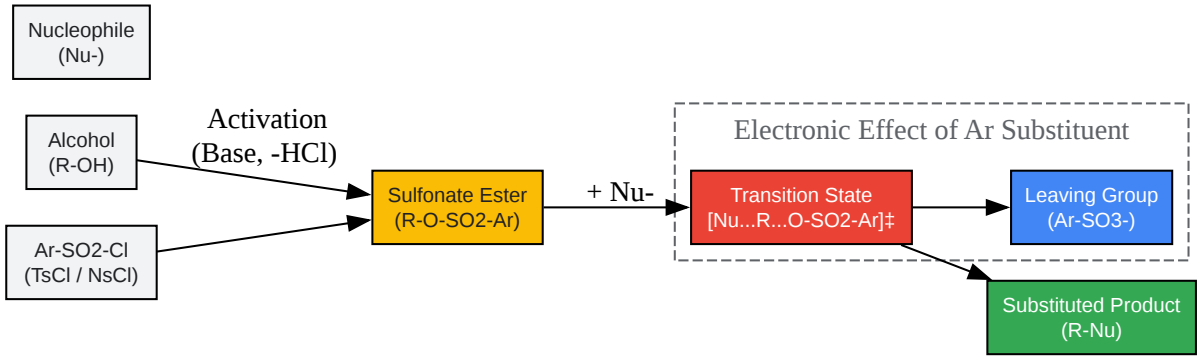

Click to download full resolution via product page

Caption: Pathway of sulfonate activation and SN2 displacement. EWGs on 'Ar' stabilize the LG anion.

References

© 2026 BenchChem. All rights reserved.

- Hammett, L. P. (1937). The Effect of Structure upon the Reactions of Organic Compounds. Benzene Derivatives. Journal of the American Chemical Society. Link
- Wipf, P. (2006). Nucleophilic Substitution Reactions: Relative Leaving Group Abilities. University of Pittsburgh Department of Chemistry. Link
- Master Organic Chemistry. (2015). Tosylates and Mesylates: Converting Alcohols to Good Leaving Groups.[2][3][4][5] Link
- Chemistry LibreTexts. (2019). 9.4: Tosylate—Another Good Leaving Group.[2][3][4][5] Link
- Kondo, Y., et al. (1969). Solvent Effects on Hammett Equation. Bulletin of the Chemical Society of Japan. Link

Need Custom Synthesis?

BenchChem offers custom synthesis for rare earth carbides and specific isotopiclabeling.

Email: info@benchchem.com or Request Quote Online.

Sources

- 1. pubs.acs.org [pubs.acs.org]
- 2. ccc.chem.pitt.edu [ccc.chem.pitt.edu]
- 3. masterorganicchemistry.com [masterorganicchemistry.com]
- 4. Mesylates and Tosylates with Practice Problems - Chemistry Steps [chemistrysteps.com]
- 5. chem.libretexts.org [chem.libretexts.org]

- To cite this document: BenchChem. [Comparative study of leaving group ability of substituted benzenesulfonyl chlorides]. BenchChem, [2026]. [Online PDF]. Available at: [https://www.benchchem.com/product/b1371581/docs#comparative-study-of-leaving-group-ability-of-substituted-benzenesulfonyl-chlorides]

Disclaimer & Data Validity:

The information provided in this document is for Research Use Only (RUO) and is strictly not intended for diagnostic or therapeutic procedures. While BenchChem strives to provide accurate protocols, we make no warranties, express or implied, regarding the fitness of this product for every specific experimental setup.

Technical Support: The protocols provided are for reference purposes. Unsure if this reagent suits your experiment?

Need Industrial/Bulk Grade? Request Custom Synthesis Quote

BenchChem

Our mission is to be the trusted global source of essential and advanced chemicals, empowering scientists and researchers to drive progress in science and industry.

Contact

Address: 3281 E Guasti Rd

Ontario, CA 91761, United States

Phone: (601) 213-4426

Email: info@benchchem.com

Contact our Ph.D. Support Team for a compatibility check

© 2026 BenchChem. All rights reserved.