A Technical Guide to the Spectroscopic Characterization of 2-Chloro-6-iodopyridine

Author: BenchChem Technical Support Team. **Date**: May 2026

Compound of Interest

Compound Name:	*2-Chloro-6-iodopyridine*
CAS No.:	*258506-66-0*
Cat. No.:	*B1370145*

Get Quote

This document provides an in-depth technical analysis of the expected spectroscopic data for **2-Chloro-6-iodopyridine** (CAS No. 258506-66-0), a key halogenated pyridine building block used in pharmaceutical and materials science research. While this compound is commercially available, publicly accessible experimental spectra are notably scarce.[1][2][3] This guide, therefore, leverages foundational spectroscopic principles and data from analogous compounds to provide a robust, predictive analysis of its Nuclear Magnetic Resonance (NMR) and Mass Spectrometry (MS) profiles. This approach is designed to empower researchers to identify, characterize, and utilize this compound with confidence.

Part 1: Nuclear Magnetic Resonance (NMR) Spectroscopy

NMR spectroscopy is the cornerstone for the structural elucidation of organic molecules. For **2-Chloro-6-iodopyridine**, both ^{1}H and ^{13}C NMR are indispensable for confirming the substitution pattern and electronic environment of the pyridine ring.

Causality in Experimental Choices: The Protocol

A self-validating NMR experiment begins with meticulous preparation. The choices made at this stage are critical for acquiring high-quality, reproducible data.

Recommended Experimental Protocol:

- Sample Preparation: Dissolve 5-10 mg of **2-Chloro-6-iodopyridine** (98%+ purity) in approximately 0.7 mL of deuterated chloroform ($CDCl_3$).[2]
- Solvent Selection Rationale: $CDCl_3$ is the solvent of choice due to its excellent solubilizing power for a wide range of organic compounds, its relative low cost, and its well-characterized residual solvent peak (δ ≈ 7.26 ppm), which can serve as a secondary internal reference.[4] Its use minimizes overlapping signals with the aromatic region where the analyte's protons are expected to resonate.
- Internal Standard: Add a small amount of tetramethylsilane (TMS) as the primary internal reference (δ = 0.00 ppm).
- Instrumentation: Acquire spectra on a 400 MHz (or higher) spectrometer equipped with a broadband probe.
- ^{1}H NMR Acquisition: Obtain the spectrum with a 30° pulse angle, an acquisition time of at least 3 seconds, and a relaxation delay of 2 seconds to ensure accurate integration.
- ^{13}C NMR Acquisition: Utilize a proton-decoupled pulse sequence (e.g., zgpg30) to produce a spectrum with single lines for each unique carbon atom. A sufficient number of scans (typically >1024) is required due to the low natural abundance of the ^{13}C isotope.[5]

Predicted ^{1}H NMR Spectral Data

The ^{1}H NMR spectrum of **2-Chloro-6-iodopyridine** is predicted to show three signals in the aromatic region, corresponding to the three non-equivalent protons on the pyridine ring. The substitution pattern leads to a readily interpretable splitting pattern.

Table 1: Predicted ^{1}H NMR Data for **2-Chloro-6-iodopyridine** in $CDCl_3$

© 2026 BenchChem. All rights reserved.

Predicted Chemical Shift (δ, ppm)	Multiplicity	Predicted Coupling Constant (J, Hz)	Integration	Assignment
~ 7.55	Triplet (t)	J(H4-H3) ≈ J(H4-H5) ≈ 7.8 Hz	1H	H4
~ 7.40	Doublet of Doublets (dd)	J(H5-H4) ≈ 7.8 Hz, J(H5-H3) ≈ 1.0 Hz	1H	H5
~ 7.20	Doublet of Doublets (dd)	J(H3-H4) ≈ 7.8 Hz, J(H3-H5) ≈ 1.0 Hz	1H	H3

Interpretation and Expert Insights:

- H4 (Triplet): The proton at position 4 is flanked by two neighboring protons (H3 and H5). It is therefore expected to appear as a triplet due to coupling with these two adjacent protons. Its chemical shift is predicted to be the most downfield of the three, as it is situated between two electron-withdrawing halogens, though their primary influence is on the adjacent carbons.

- H3 and H5 (Doublets of Doublets): The protons at positions 3 and 5 are each coupled to the central H4 proton with a typical ortho-coupling constant (~7.8 Hz). They are also coupled to each other with a small meta-coupling constant (~1.0 Hz), resulting in a doublet of doublets pattern for each. The relative positions of H3 and H5 are determined by the substituents; the iodine at C6 will have a stronger deshielding effect on the adjacent H5 than the chlorine at C2 has on H3. However, given the similar electronegativities, their signals may be close. The assignments are based on predictions from standard substituent effects.

Figure 1: Predicted ^{1}H-^{1}H coupling relationships in **2-Chloro-6-iodopyridine**.

Predicted ^{13}C NMR Spectral Data

The proton-decoupled ^{13}C NMR spectrum is expected to show five distinct signals for the five carbon atoms of the pyridine ring. The chemical shifts are heavily influenced by the electronegativity and position of the halogen substituents.

© 2026 BenchChem. All rights reserved.

Table 2: Predicted ^{13}C NMR Data for **2-Chloro-6-iodopyridine** in $CDCl_3$

Predicted Chemical Shift (δ, ppm)	Assignment	Rationale
~ 152.0	C2	Directly attached to electronegative chlorine and adjacent to nitrogen.
~ 141.0	C4	The β-carbon, expected to be significantly deshielded.
~ 130.0	C5	Adjacent to the carbon bearing iodine.
~ 122.0	C3	Adjacent to the carbon bearing chlorine.
~ 110.0	C6	Directly attached to iodine; carbon shifts are heavily influenced by heavy halogens.

Interpretation and Expert Insights:

- C2 and C6 (Halogenated Carbons): The carbons directly bonded to the halogens (C2 and C6) are the most challenging to predict precisely without experimental data. The C2 carbon, attached to chlorine, is expected to be significantly downfield due to the combined electron-withdrawing effects of chlorine and the adjacent nitrogen atom. The C6 carbon, bonded to iodine, is also significantly shifted. While iodine is less electronegative than chlorine, the "heavy atom effect" can lead to significant shifts, which are often upfield compared to what electronegativity alone would suggest, though in aromatic systems this effect can be complex. The predicted value of ~110.0 ppm is an estimate based on this principle.
- C4: This carbon is predicted to have the most downfield shift among the CH carbons, a common feature in substituted pyridines.
- C3 and C5: These carbons will have distinct chemical shifts, reflecting the different electronic environments created by the adjacent C-Cl and C-I bonds.

© 2026 BenchChem. All rights reserved.

Part 2: Mass Spectrometry (MS)

Mass spectrometry provides critical information about a molecule's mass and fragmentation pattern, which serves as a molecular fingerprint. Electron Ionization (EI) is the most common technique for small, volatile molecules like **2-Chloro-6-iodopyridine**.

Trustworthiness through Self-Validation: The Protocol

An authoritative mass spectrum relies on proper instrument calibration and clear identification of the molecular ion.

Recommended Experimental Protocol:

- Instrumentation: Utilize a Gas Chromatography-Mass Spectrometer (GC-MS) with an EI source.
- Sample Introduction: Introduce a dilute solution of the compound in a volatile solvent (e.g., dichloromethane) via the GC inlet. This ensures sample purification and controlled introduction into the ion source.
- Ionization: Use a standard electron energy of 70 eV.
- Analysis: Scan a mass range from m/z 40 to 300 to ensure capture of the molecular ion and all significant fragments.
- Validation: The protocol is self-validating by observing the characteristic isotopic pattern of the chlorine atom in the molecular ion and its fragments.

Predicted Mass Spectrum Analysis

The mass spectrum of **2-Chloro-6-iodopyridine** will be defined by its molecular ion and a predictable fragmentation cascade.

Table 3: Predicted Key Ions in the EI Mass Spectrum of **2-Chloro-6-iodopyridine**

© 2026 BenchChem. All rights reserved.

m/z (for ^{35}Cl)	m/z (for ^{37}Cl)	Predicted Relative Abundance	Proposed Identity / Fragmentation
239	241	Moderate	$[M]^+$, Molecular Ion
204	206	High	$[M - Cl]^+$
112	-	High	$[M - I]^+$
78	-	High	$[C_5H_3N]^+$, Pyridine radical cation after loss of both halogens
51	-	Moderate	$[C_4H_3]^+$, Common fragment from pyridine ring cleavage

Interpretation and Expert Insights:

- Molecular Ion (M^+): The most crucial signal is the molecular ion peak. Due to the natural abundance of chlorine isotopes ($^{35}Cl \approx 75.8\%$, $^{37}Cl \approx 24.2\%$), the molecular ion will appear as a pair of peaks at m/z 239 and m/z 241 with a characteristic intensity ratio of approximately 3:1.[6] Observing this pattern is a definitive confirmation of the presence of one chlorine atom in the molecule.

- Primary Fragmentation: The weakest bond in the molecule is the C-I bond, making the loss of an iodine radical (•I, 127 Da) a highly favorable fragmentation pathway. This would lead to a very intense peak at m/z 112 ($[C_5H_3ClN]^+$). Loss of a chlorine radical (•Cl, 35 Da) is also expected, giving a strong signal cluster at m/z 204/206.

- Ring Fragmentation: Subsequent fragmentation of the pyridine ring, such as the loss of HCN (27 Da), can lead to smaller fragments. The peak at m/z 78 corresponds to the pyridyl cation radical after losing both halogens.

© 2026 BenchChem. All rights reserved.

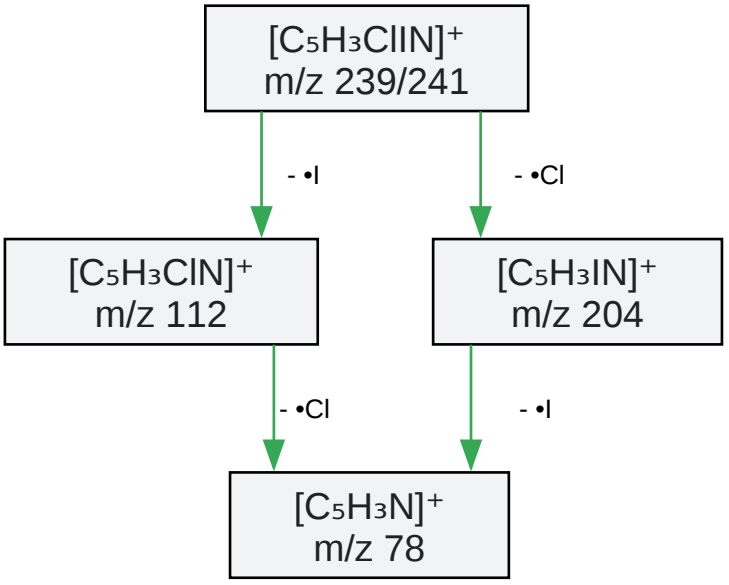

Click to download full resolution via product page

Figure 2: Plausible primary fragmentation pathways for **2-Chloro-6-iodopyridine** in EI-MS.

Conclusion

This guide provides a detailed, predictive framework for the spectroscopic analysis of **2-Chloro-6-iodopyridine**. By understanding the expected ^{1}H NMR, ^{13}C NMR, and mass spectral data, researchers, scientists, and drug development professionals can more effectively confirm the identity, purity, and structure of this important chemical intermediate. The principles and protocols outlined herein represent a robust methodology for the characterization of novel or poorly documented organic compounds, grounding analytical work in solid scientific reasoning and expertise.

References

- ChemWhat. **2-Chloro-6-iodopyridine** CAS#: 258506-66-0. [Link]
- Capot Chemical. 258506-66-0 | **2-Chloro-6-iodopyridine**. [Link]
- ResearchGate. Experimental 13C NMR spectrum of 2-Cl-6-MA. [Link]
- Bioregistry. Spectral Database for Organic Compounds. [Link]

© 2026 BenchChem. All rights reserved.

- The Royal Society of Chemistry. Supporting information. [Link]
- Human Metabolome Database. 1H NMR Spectrum (1D, 500 MHz, CDCl3, experimental) (HMDB0000926). [Link]
- UW-Madison Libraries. Spectral Database for Organic Compounds, SDBS. [Link]
- Re3data.org. Spectral Database for Organic Compounds. [Link]
- University of Regensburg. some previous examples (13c-nmr). [Link]
- Iraqi Journal of Science. Mass Spectra of some substituted 2-Chloro-pyridones. [Link]
- NIST WebBook. Pyridine, 2-chloro-. [Link]
- University of Bath. 13C NMR Spectroscopy. [Link]
- ACD/Labs. Using Predicted 13C NMR Spectra with Open Resources for Structure Dereplication. [Link]
- Organic Chemistry Data. NMR Spectroscopy :: 1H NMR Chemical Shifts. [Link]
- Doc Brown's Chemistry. mass spectrum of 2-chloropropane. [Link]

Need Custom Synthesis?

BenchChem offers custom synthesis for rare earth carbides and specific isotopiclabeling.

Email: info@benchchem.com or Request Quote Online.

Sources

- 1. chemwhat.com [chemwhat.com]
- 2. 2-Chloro-6-iodopyridine | 258506-66-0 [sigmaaldrich.com]
- 3. 258506-66-0 | 2-Chloro-6-iodopyridine - Capot Chemical [capotchem.com]
- 4. 2-Chloropyridine(109-09-1) 1H NMR [m.chemicalbook.com]
- 5. Previous spectra [qorganica.qui.uam.es]

- 6. C3H7Cl CH3CHClCH3 mass spectrum of 2-chloropropane fragmentation pattern of m/z m/e ions for analysis and identification of isopropyl chloride image diagram doc brown's advanced organic chemistry revision notes [docbrown.info]
- To cite this document: BenchChem. [A Technical Guide to the Spectroscopic Characterization of 2-Chloro-6-iodopyridine]. BenchChem, [2026]. [Online PDF]. Available at: [https://www.benchchem.com/product/b1370145/docs#a-technical-guide-to-the-spectroscopic-characterization-of-2-chloro-6-iodopyridine]

Disclaimer & Data Validity:

The information provided in this document is for Research Use Only (RUO) and is strictly not intended for diagnostic or therapeutic procedures. While BenchChem strives to provide accurate protocols, we make no warranties, express or implied, regarding the fitness of this product for every specific experimental setup.

Technical Support: The protocols provided are for reference purposes. Unsure if this reagent suits your experiment?

Need Industrial/Bulk Grade? Request Custom Synthesis Quote

BenchChem

Our mission is to be the trusted global source of essential and advanced chemicals, empowering scientists and researchers to drive progress in science and industry.

Contact

Address: 3281 E Guasti Rd

Ontario, CA 91761, United States

Phone: (601) 213-4426

Email: info@benchchem.com

Contact our Ph.D. Support Team for a compatibility check

© 2026 BenchChem. All rights reserved.

© 2026 BenchChem. All rights reserved.