Technical Guide: Novel Fluorinated 1,8-Naphthyridine Heterocycles

Author: BenchChem Technical Support Team. **Date**: April 2026

Compound of Interest

Compound Name:	*5-Chloro-2-(difluoromethyl)-1,8-naphthyridine*
Cat. No.:	*B13685964*

Get Quote

Architectures, Synthesis, and Medicinal Utility

Executive Summary

The 1,8-naphthyridine scaffold has evolved beyond its classical role in antibacterial fluoroquinolone mimics (e.g., nalidixic acid, enoxacin) to become a privileged structure in neuropharmacology and oncology. This guide focuses on novel fluorinated derivatives, specifically trifluoromethylated analogs and 1,8-naphthyridin-2-one scaffolds targeting the Cannabinoid Type 2 (CB2) receptor.

The incorporation of fluorine—particularly the trifluoromethyl (

) group—into the 1,8-naphthyridine core is a critical strategy for modulating lipophilicity (

), lowering basicity (

), and blocking metabolic hotspots (CYP450 oxidation). This guide provides actionable synthetic protocols and structure-activity relationship (SAR) insights for these emerging heterocycles.

© 2026 BenchChem. All rights reserved.

The Fluorine Advantage: Physicochemical Modulation

In the context of 1,8-naphthyridines, fluorination is not merely a substituent change; it is a functional redesign of the heterocycle.

Electronic and Metabolic Impact

The 1,8-naphthyridine ring is electron-deficient. Introducing electron-withdrawing groups like

or

further reduces electron density, altering the basicity of the ring nitrogens.

- pKa Modulation: Unsubstituted 1,8-naphthyridine has a

  of ~3.4. Fluorination at the 3- or 5-positions lowers this further, reducing protonation at physiological pH and improving membrane permeability.

- Metabolic Blocking: The C3 and C6 positions are prone to oxidative metabolism. Fluorine substitution at these sites (e.g., C6-F in enoxacin) blocks P450-mediated hydroxylation, extending half-life (

).

The "Magic Methyl" Replacement

The

group acts as a "bioisostere" for the methyl group but with inverted electronics and significantly higher lipophilicity. In 1,8-naphthyridines, replacing a C-methyl with a C-trifluoromethyl group often results in:

- Increased Lipophilicity:

  .

- Conformational Locking: The bulk of the

© 2026 BenchChem. All rights reserved.

group (Van der Waals radius ~2.2 Å vs 1.2 Å for H) can restrict bond rotation, locking the molecule into a bioactive conformation.

Synthetic Architectures

We distinguish between two primary synthetic strategies: Cyclocondensation for trifluoromethylated cores and Friedländer Annulation for functionalized ligands.

Strategy A: Regioselective Cyclocondensation (The Protocol)

A robust method for generating 2-amino-5-trifluoromethyl-1,8-naphthyridines involves the reaction of 2,6-diaminopyridine with fluorinated enones. This approach is superior to direct fluorination, which often suffers from poor regioselectivity on the electron-poor naphthyridine ring.

Mechanism:

- Michael Addition: The exocyclic amine of 2,6-diaminopyridine attacks the

  -carbon of the trifluoroalk-3-en-2-one.
- Cyclization: Intramolecular attack on the carbonyl carbon.
- Dehydration/Aromatization: Loss of water to form the aromatic system.

Strategy B: Friedländer Synthesis for CB2 Ligands

For 1,8-naphthyridin-2-one derivatives (prominent CB2 agonists), the Friedländer condensation between 2-aminonicotinaldehyde and active methylene compounds is the industry standard.

© 2026 BenchChem. All rights reserved.

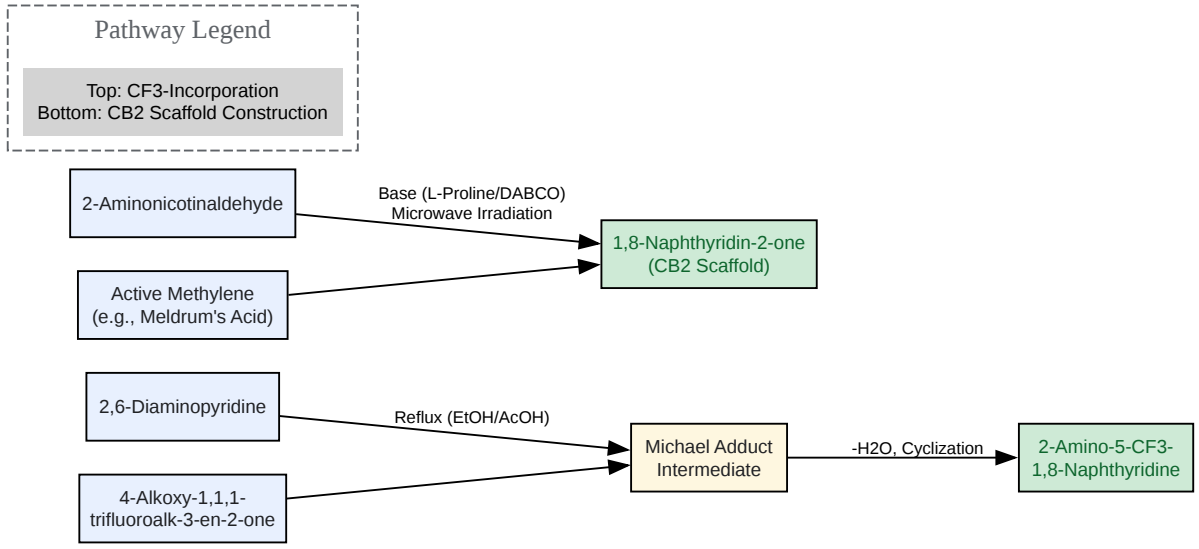

Click to download full resolution via product page

Figure 1: Divergent synthetic pathways for creating trifluoromethylated cores (top) versus functionalized lactam scaffolds (bottom).

Case Study: CB2 Receptor Agonists

Recent medicinal chemistry efforts have identified 1,8-naphthyridin-2(1H)-one-3-carboxamides as potent, selective agonists for the Cannabinoid Type 2 (CB2) receptor.[1][2][3][4][5] Unlike CB1 ligands, these do not cross the blood-brain barrier significantly, avoiding psychotropic side effects while treating peripheral pain and inflammation.

The "Toggle Switch" Mechanism

Docking studies suggest that the efficacy of these ligands depends on their interaction with Trp 6.48 (the "Toggle Switch") in the receptor.

- Agonists: Stabilize the active conformation, often via

© 2026 BenchChem. All rights reserved.

-

stacking with the naphthyridine core.

- Inverse Agonists: Sterically encumber the toggle switch, preventing receptor activation.

SAR Logic Flow

The transition from Agonist to Antagonist is controlled by substitution at the C6 position.[1][2][5]

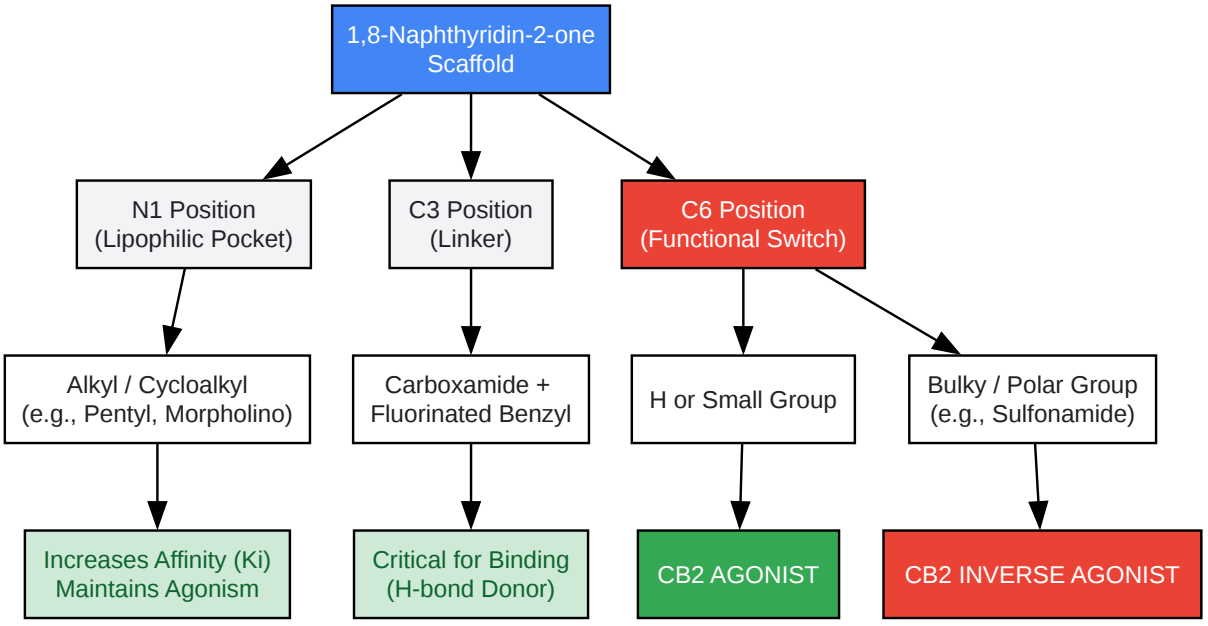

Click to download full resolution via product page

Figure 2: Structure-Activity Relationship (SAR) map for CB2-selective 1,8-naphthyridines. Note the critical role of C6 in determining functional efficacy.

Detailed Experimental Protocol

Target Synthesis:2-Amino-5-trifluoromethyl-7-(4-methoxyphenyl)-1,8-naphthyridine Method: Cyclocondensation (adapted from Molecules 2011 and J. Med. Chem. precedents).[6]

Reagents & Equipment

© 2026 BenchChem. All rights reserved.

- Precursors: 2,6-Diaminopyridine (1.0 equiv), 4-methoxy-1,1,1-trifluoro-4-(4-methoxyphenyl)but-3-en-2-one (1.0 equiv).
- Solvent: Glacial Acetic Acid (

) or Ethanol (

) with catalytic

  .
- Purification: Silica gel (60–120 mesh), Ethyl Acetate/Hexane.

Step-by-Step Methodology

- Reaction Setup: In a 50 mL round-bottom flask equipped with a magnetic stir bar and reflux condenser, dissolve 2,6-diaminopyridine (10 mmol) in ethanol (20 mL).
- Addition: Add the fluorinated enone (10 mmol) slowly to the solution. Add 2-3 drops of concentrated

  as a catalyst.
- Reflux: Heat the mixture to reflux (

) for 6–8 hours. Monitor progress via TLC (Mobile phase: 30% EtOAc in Hexane). The product typically appears as a fluorescent spot under UV (254 nm).
- Work-up:
  - Cool the reaction mixture to room temperature.
  - Pour the mixture into crushed ice (100 g) with vigorous stirring.
  - Neutralize with 10%

    solution until pH ~8. A yellow/brown precipitate should form.
- Isolation: Filter the solid under vacuum. Wash the cake with cold water (

© 2026 BenchChem. All rights reserved.

) to remove unreacted pyridine and acid traces.

- Purification: Recrystallize the crude solid from hot ethanol. If purity is <95%, perform column chromatography (Gradient: 10%

  30% EtOAc/Hexane).

- Validation:

  - Yield: Expected range 60–75%.

  - 1H NMR (DMSO-d6): Look for the disappearance of the enone vinylic protons and the appearance of the naphthyridine aromatic signals (

    8.0–9.0 ppm). The

    protons typically appear as a broad singlet around

    7.2 ppm.

References

- Bonacorso, H. G., et al. (2011). "General Pathway for a Convenient One-Pot Synthesis of Trifluoromethyl-Containing 2-amino-7-alkyl(aryl/heteroaryl)-1,8-naphthyridines." Molecules, 16(4), 2817–2832. Link

- Manera, C., et al. (2014). "CB2-Selective Cannabinoid Receptor Ligands: Synthesis, Pharmacological Evaluation, and Molecular Modeling Investigation of 1,8-Naphthyridin-2(1H)-one-3-carboxamides." Journal of Medicinal Chemistry, 57(20), 8345–8357. Link

- Lucchesi, V., et al. (2014).[7] "Development of selective, fluorescent cannabinoid type 2 receptor ligands based on a 1,8-naphthyridin-2(1H)-one-3-carboxamide scaffold." MedChemComm, 5, 153-163. Link

- Mithula, S., et al. (2021). "1,8-Naphthyridine Derivatives: An Updated Review on Recent Advancements of Their Myriad Biological Activities." Future Medicinal Chemistry, 13(18), 1591-1618. Link

© 2026 BenchChem. All rights reserved.

- BenchChem Protocols. (2025). "Application Notes and Protocols for the Friedländer Synthesis of 1,8-Naphthyridine Derivatives." BenchChem Technical Library. Link

Need Custom Synthesis?

BenchChem offers custom synthesis for rare earth carbides and specific isotopiclabeling.

Email: info@benchchem.com or Request Quote Online.

Sources

- 1. Rational drug design of CB2 receptor ligands: from 2012 to 2021 - RSC Advances (RSC Publishing) DOI:10.1039/D2RA05661E [pubs.rsc.org]
- 2. Document: CB2-selective cannabinoid receptor ligands: synthesis, pharmacological evaluation, and molecular modeling investigation of 1,8-Naphthyridin... - ChEMBL [ebi.ac.uk]
- 3. pubs.acs.org [pubs.acs.org]
- 4. CB2-Selective Cannabinoid Receptor Ligands: Synthesis, Pharmacological Evaluation, and Molecular Modeling Investigation of 1,8-Naphthyridin-2(1H)-one-3-carboxamides - PMC [pmc.ncbi.nlm.nih.gov]
- 5. CB2-selective cannabinoid receptor ligands: synthesis, pharmacological evaluation, and molecular modeling investigation of 1,8-Naphthyridin-2(1H)-one-3-carboxamides - PubMed [pubmed.ncbi.nlm.nih.gov]
- 6. oist.repo.nii.ac.jp [oist.repo.nii.ac.jp]
- 7. pdfs.semanticscholar.org [pdfs.semanticscholar.org]
- To cite this document: BenchChem. [Technical Guide: Novel Fluorinated 1,8-Naphthyridine Heterocycles]. BenchChem, [2026]. [Online PDF]. Available at: [https://www.benchchem.com/product/b13685964/docs#technical-guide-novel-fluorinated-1-8-naphthyridine-heterocycles]

Disclaimer & Data Validity:

The information provided in this document is for Research Use Only (RUO) and is strictly not intended for diagnostic or therapeutic procedures. While BenchChem strives to provide accurate protocols, we make no warranties, express or implied, regarding the fitness of this product for every specific experimental setup.

© 2026 BenchChem. All rights reserved.

Technical Support: The protocols provided are for reference purposes. Unsure if this reagent suits your experiment?

Need Industrial/Bulk Grade? Request Custom Synthesis Quote

BenchChem

Our mission is to be the trusted global source of essential and advanced chemicals, empowering scientists and researchers to drive progress in science and industry.

Contact

Address: 3281 E Guasti Rd

Ontario, CA 91761, United States

Phone: (601) 213-4426

Email: info@benchchem.com

Contact our Ph.D. Support Team for a compatibility check

© 2026 BenchChem. All rights reserved.