Reactivity Profile of 5-Fluoro-3-nitropicolinic acid

Author: BenchChem Technical Support Team. **Date**: April 2026

Compound of Interest

Compound Name:	*5-Fluoro-3-nitropicolinic acid*
Cat. No.:	*B13671023*

Get Quote

Content Type: Technical Guide Audience: Medicinal Chemists, Process Scientists, Drug Discovery Researchers

Executive Summary: The Strategic Value of the Scaffold

5-Fluoro-3-nitropicolinic acid (5-F-3-NP) represents a "privileged" molecular architecture. It combines the electron-deficient nature of the pyridine ring with three distinct functional handles:

- C2-Carboxyl: A handle for amide coupling or heterocycle formation (e.g., oxadiazoles).
- C3-Nitro: A latent amine precursor for fused ring construction (e.g., pyrido[3,2-d]pyrimidines).
- C5-Fluorine: A metabolic blocker that modulates pKa and lipophilicity without serving as a primary leaving group.

Unlike simple pyridines, the interplay between the nitro group (EWG) and the ring nitrogen creates specific zones of electrophilicity, dictating a unique reactivity map.

© 2026 BenchChem. All rights reserved.

Molecular Architecture & Reactivity Map

The reactivity of 5-F-3-NP is governed by the "push-pull" electronics of the pyridine ring. The nitrogen atom (N1) and the nitro group (C3) act as electron sinks, while the fluorine (C5) provides inductive withdrawal but resonance donation.

Electronic Zones

- Zone 1: The Electrophilic Centers (C4 & C6).
  - C6 Position: Ortho to N1 and para to the Nitro group. This is the most electron-deficient carbon, highly susceptible to Nucleophilic Aromatic Substitution of Hydrogen (S_NArH) or radical alkylation (Minisci reaction).
  - C4 Position: Para to N1 and ortho to the Nitro group. Activated, but sterically crowded by the adjacent nitro group.
- Zone 2: The Stable Modulator (C5).
  - The C5-Fluorine is meta to the activating Nitro group and beta to the ring Nitrogen. Consequently, it is kinetically stable toward classical S_NAr displacement. This stability is a feature, not a bug, allowing the fluorine to persist through synthetic sequences to block metabolic oxidation in the final drug candidate.
- Zone 3: The Labile Functionality (C2 & C3).
  - C2-COOH: Prone to thermal decarboxylation if the ring is further activated.
  - C3-NO2: Readily reduced to the amine, often triggering spontaneous lactamization if a C2-ester is present.

Visualization: Reactivity Topology

The following diagram maps the electronic vectors and reactive sites.

© 2026 BenchChem. All rights reserved.

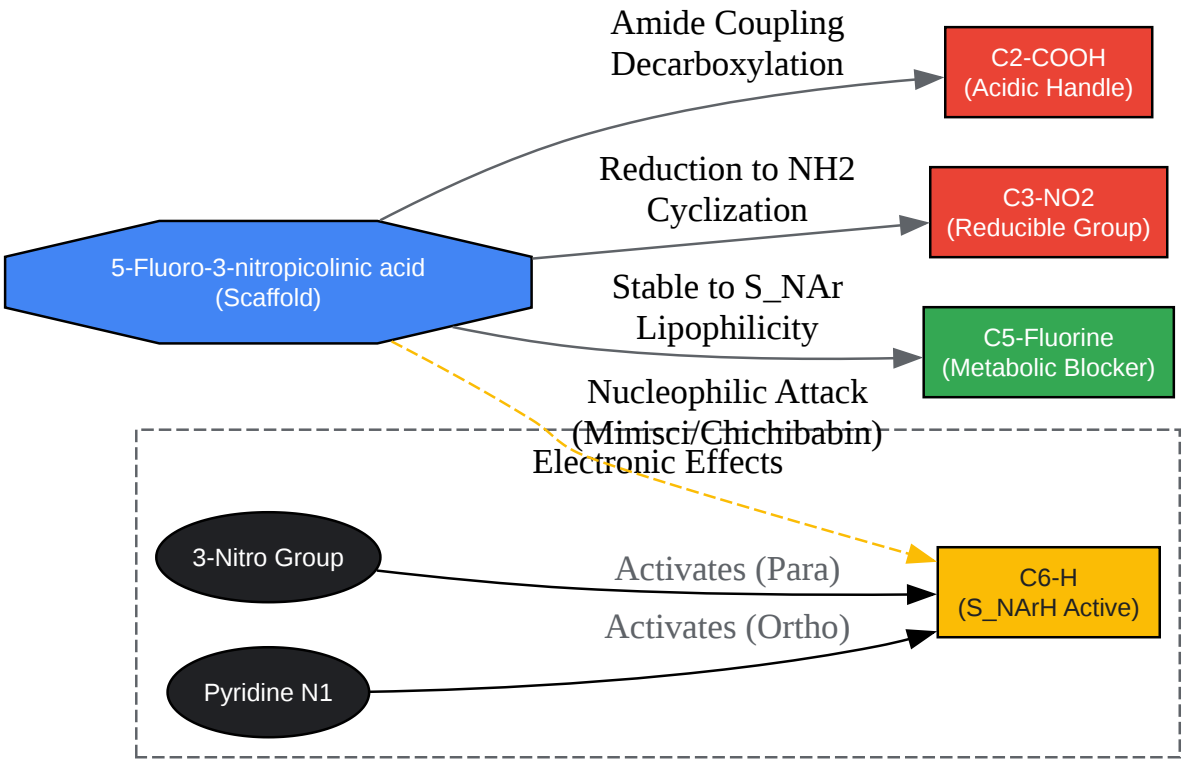

Click to download full resolution via product page

Caption: Electronic topology of **5-Fluoro-3-nitropicolinic acid** showing activation zones.

Core Experimental Protocols

These protocols are designed to be self-validating. The "Checkpoints" ensure the reaction is proceeding correctly before committing valuable intermediates.

Protocol A: Selective Nitro Reduction (Synthesis of 3-Amino-5-fluoropicolinic acid)

The reduction of the nitro group is the most critical transformation, converting the scaffold into a precursor for bicyclic systems.

Mechanism: Chemo-selective reduction is required to avoid defluorination (hydrodefluorination), which can occur under aggressive catalytic hydrogenation conditions (e.g., Pd/C, high pressure, high temp).

© 2026 BenchChem. All rights reserved.

Methodology (Iron-Mediated Reduction):

- Setup: Charge a 3-neck flask with **5-Fluoro-3-nitropicolinic acid** (1.0 equiv) and Ethanol/Water (4:1 v/v).
- Activation: Add Ammonium Chloride (5.0 equiv) and Iron Powder (5.0 equiv, <325 mesh).
- Reaction: Heat to reflux (80°C) with vigorous mechanical stirring.
  - Why Iron? Fe/NH4Cl is mild and avoids the risk of C-F bond cleavage common with Pd/H2.
- Monitoring: Monitor by LC-MS.
  - Checkpoint: The starting material (MW ~186) should disappear; Product (MW ~156) appears. Watch for a mass of 157 (M+H).
- Workup: Filter hot through a Celite pad to remove iron oxides. Wash the pad with hot ethanol. Concentrate the filtrate.
- Purification: Acidify to pH 3-4 to precipitate the free amino acid or isolate as the hydrochloride salt.

Protocol B: Amide Coupling (C2 Functionalization)

Coupling the C2-acid requires care to prevent racemization (if coupling to chiral amines) or decarboxylation.

Methodology:

- Activation: Dissolve 5-F-3-NP (1.0 equiv) in dry DMF. Add HATU (1.1 equiv) and DIPEA (2.5 equiv).
  - Why HATU? It minimizes racemization and works well for electron-deficient acids which can be sluggish.
- Coupling: Stir for 5 mins (pre-activation), then add the amine nucleophile (1.1 equiv).

© 2026 BenchChem. All rights reserved.

- Reaction: Stir at Room Temperature for 2-4 hours.
  - Checkpoint: Color change is common (yellow to orange). LC-MS should show the amide mass.
- Workup: Dilute with EtOAc, wash with 5% LiCl (to remove DMF), then NaHCO3 and Brine.

Synthesis Pathway (Reverse Engineering)

Understanding the origin of the scaffold helps in troubleshooting impurity profiles. The most robust route starts from commercially available 2-amino-5-fluoropyridine.

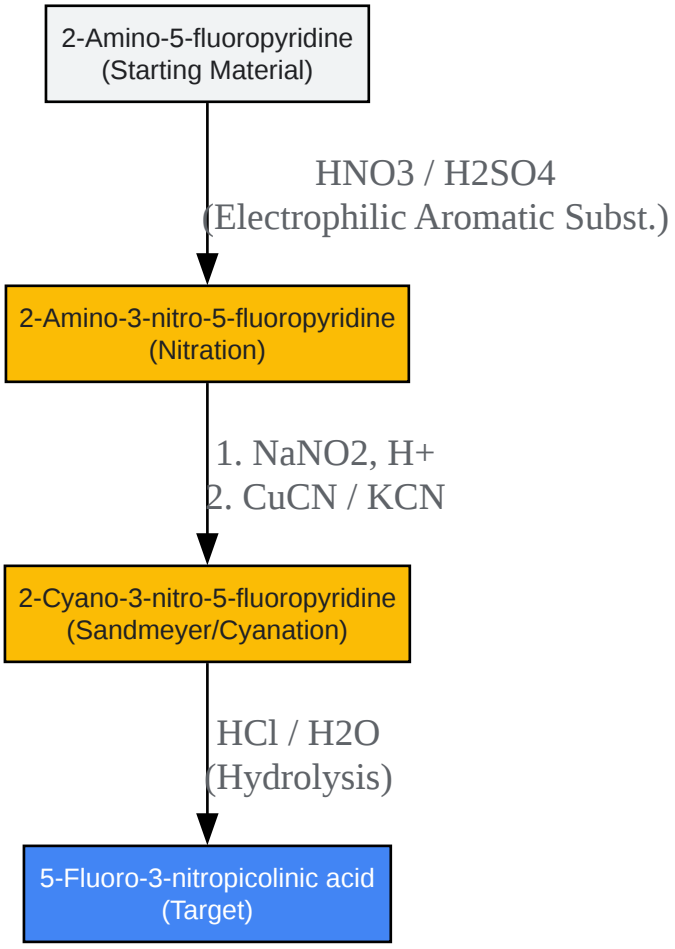

Click to download full resolution via product page

Caption: Synthetic route from 2-amino-5-fluoropyridine via Sandmeyer cyanation.

Causality in Synthesis:

© 2026 BenchChem. All rights reserved.

- Step 1 (Nitration): The amino group directs the nitro group to the ortho position (C3). The fluorine at C5 directs meta, reinforcing the C3 position.
- Step 2 (Cyanation): Diazotization of the amine followed by CuCN displacement (Sandmeyer) installs the carbon at C2.
- Step 3 (Hydrolysis): Acidic hydrolysis converts the nitrile to the carboxylic acid. Basic hydrolysis is avoided to prevent nucleophilic attack on the ring (S_NAr of F or NO2).

Quantitative Data Summary

Property	Value / Characteristic	Implication for Research
Molecular Weight	186.09 g/mol	Fragment-like, ideal for growing.
pKa (COOH)	~2.5 - 3.0 (Predicted)	Highly acidic due to EWG (NO2, F, N).
S_NAr Reactivity (F)	Low (Meta to NO2)	Stable under standard coupling conditions.
S_NArH Reactivity (C6)	High	Avoid strong bases (e.g., LDA) without electrophiles.
Reduction Potential	Facile (NO2 -> NH2)	Compatible with Fe, SnCl2, H2/Pt.

References

- Synthesis of Fluorinated Pyridines
  - Title: Synthesis and Reactions of 2-Amino-3-Cyanopyridine Deriv
  - Source: ResearchG
  - URL:[Link]
- Reactivity of Nitro-Pyridine Carboxylates

© 2026 BenchChem. All rights reserved.

- Title: Modulating anti-inflammatory and anticancer properties by designing a family of metal-complexes based on 5-nitropicolinic acid.[1]
- Source: Dalton Transactions (RSC).[1]
- URL:[Link]

- Fluorine Effect in Medicinal Chemistry
  - Title: Roles of Fluorine in Drug Design and Drug Action.[2]
  - Source: Bentham Science.
  - URL:[Link]
- Precursor Synthesis (2-Cyano-3-nitro-5-fluoropyridine): Title: How to Synthesize 2-Cyano-5-fluoropyridine? Source: GuideChem.
- Analogous S_NAr Reactivity
  - Title: Nucleophilic Aromatic Substitution of Unactivated Fluoroarenes Enabled by Organic Photoredox C
  - Source: J. Am. Chem. Soc.[3] (via UNC).
  - URL:[Link]

Need Custom Synthesis?

BenchChem offers custom synthesis for rare earth carbides and specific isotopiclabeling.

Email: info@benchchem.com or Request Quote Online.

Sources

- 1. Modulating anti-inflammatory and anticancer properties by designing a family of metal-complexes based on 5-nitropicolinic acid - Dalton Transactions (RSC Publishing) [pubs.rsc.org]
- 2. benthamscience.com [benthamscience.com]

- 3. dash.harvard.edu [dash.harvard.edu]
- To cite this document: BenchChem. [Reactivity Profile of 5-Fluoro-3-nitropicolinic acid]. BenchChem, [2026]. [Online PDF]. Available at: [https://www.benchchem.com/product/b13671023/docs#reactivity-profile-of-5-fluoro-3-nitropicolinic-acid]

Disclaimer & Data Validity:

The information provided in this document is for Research Use Only (RUO) and is strictly not intended for diagnostic or therapeutic procedures. While BenchChem strives to provide accurate protocols, we make no warranties, express or implied, regarding the fitness of this product for every specific experimental setup.

Technical Support: The protocols provided are for reference purposes. Unsure if this reagent suits your experiment?

Need Industrial/Bulk Grade? Request Custom Synthesis Quote

BenchChem

Our mission is to be the trusted global source of essential and advanced chemicals, empowering scientists and researchers to drive progress in science and industry.

Contact

Address: 3281 E Guasti Rd

Ontario, CA 91761, United States

Phone: (601) 213-4426

Email: info@benchchem.com

Contact our Ph.D. Support Team for a compatibility check