Introduction: The Analytical Imperative for 3-Chloro-5-fluorobenzonitrile

Author: BenchChem Technical Support Team. **Date**: May 2026

Compound of Interest	
Compound Name:	*3-Chloro-5-fluorobenzonitrile*
CAS No.:	*327056-73-5*
Cat. No.:	*B1363421*

Get Quote

3-Chloro-5-fluorobenzonitrile is a halogenated aromatic nitrile, a class of compounds frequently utilized as key building blocks in the synthesis of pharmaceuticals and agrochemicals. Its precise structure, purity, and degradation products are critical parameters that influence the safety and efficacy of final products. Mass spectrometry (MS), coupled with chromatographic separation, stands as the definitive analytical technique for its characterization, offering unparalleled sensitivity and structural elucidation capabilities. This guide details a primary gas chromatography-mass spectrometry (GC-MS) workflow and a complementary liquid chromatography-mass spectrometry (LC-MS) method, providing a holistic analytical strategy.

Core Physicochemical Properties and Safety Profile

A foundational understanding of the analyte's properties is paramount for method development. **3-Chloro-5-fluorobenzonitrile** is a solid at room temperature with a melting point between 54-59 °C and is amenable to techniques requiring thermal vaporization.[1][2]

© 2026 BenchChem. All rights reserved.

Property	Value	Source
Chemical Formula	C_7H_3ClFN	[3]
Average Molecular Weight	155.56 g/mol	[1][3]
Monoisotopic Mass	154.9938050 Da	[3]
IUPAC Name	3-chloro-5-fluorobenzonitrile	[3]
CAS Number	327056-73-5	[1][3]
Form	Solid	[1][2]

Safety Considerations: **3-Chloro-5-fluorobenzonitrile** is classified as harmful if swallowed, toxic in contact with skin, and causes serious eye irritation.[4][5] It may also cause respiratory irritation.[5] All handling must be performed in a well-ventilated fume hood using appropriate personal protective equipment (PPE), including gloves and safety glasses.[1][4] Consult the Safety Data Sheet (SDS) for complete handling and disposal information.[4]

Primary Analytical Workflow: Gas Chromatography-Mass Spectrometry (GC-MS)

Causality: GC-MS is the preferred method for the analysis of volatile and thermally stable small molecules like **3-Chloro-5-fluorobenzonitrile**.[6][7] The technique provides excellent chromatographic resolution and, when paired with Electron Ionization (EI), generates reproducible, library-searchable mass spectra rich with structural information.

Experimental Protocol: Sample Preparation

Principle: The objective is to dissolve the analyte in a volatile solvent compatible with GC injection, ensuring it is free of non-volatile materials that could contaminate the inlet and column.[6][8]

- Stock Solution Preparation: Accurately weigh approximately 10 mg of **3-Chloro-5-fluorobenzonitrile**.
- Dissolve the solid in a Grade A volumetric flask (10 mL) using a high-purity volatile solvent such as Dichloromethane (DCM) or Ethyl Acetate to create a 1 mg/mL stock solution. Avoid

© 2026 BenchChem. All rights reserved.

non-volatile solvents like DMSO.[9]

- Working Solution Preparation: Perform a serial dilution of the stock solution with the same solvent to a final concentration of approximately 1-10 µg/mL. This concentration range is typically sufficient to produce a strong signal without saturating the detector.
- Filtration: Filter the final solution through a 0.22 µm PTFE syringe filter into a 2 mL autosampler vial. This step is critical to remove any particulate matter that could block the injector or column.[9]

Instrumental Workflow

The following diagram illustrates the logical flow of the GC-MS analysis from sample introduction to data acquisition.

© 2026 BenchChem. All rights reserved.

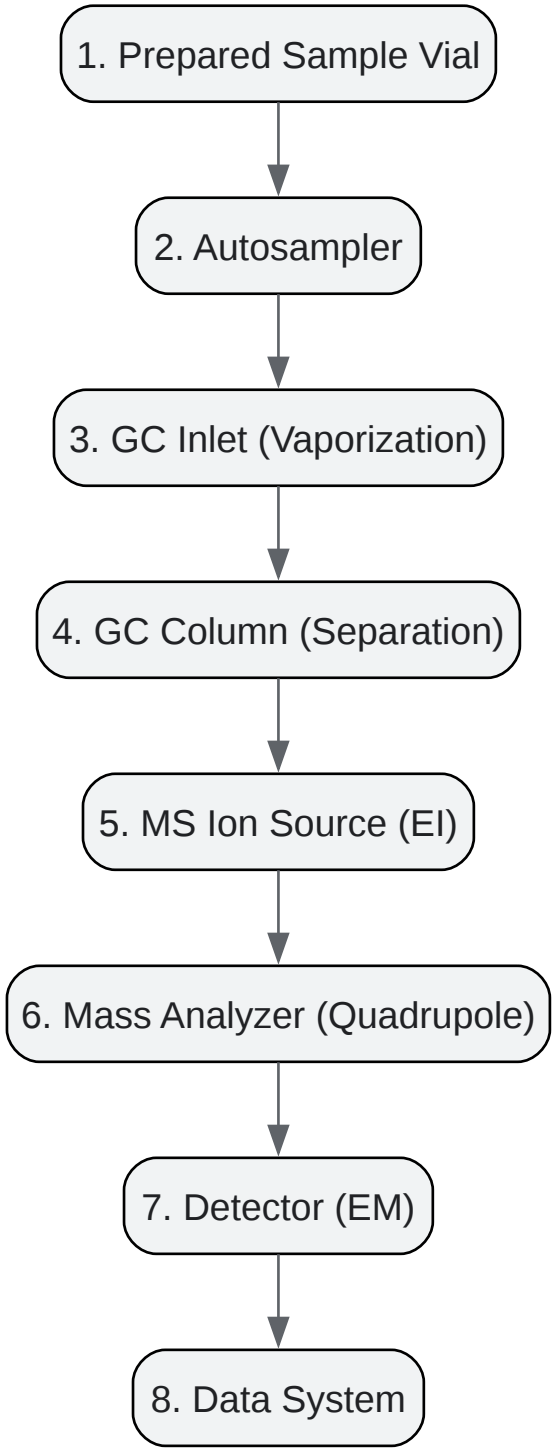

Click to download full resolution via product page

Caption: High-level workflow for GC-MS analysis.

Recommended GC-MS Parameters

© 2026 BenchChem. All rights reserved.

The following table outlines a robust starting point for instrumental parameters. Optimization may be required based on the specific instrument and column used.

© 2026 BenchChem. All rights reserved.

Parameter	Recommended Setting	Rationale
GC System	Agilent 8890 or equivalent	Standard, reliable platform.
Column	Agilent DB-5ms (30 m x 0.25 mm, 0.25 µm) or equivalent	A 5% phenyl-methylpolysiloxane stationary phase provides excellent selectivity for aromatic compounds.
Carrier Gas	Helium, constant flow at 1.2 mL/min	Inert and provides good chromatographic efficiency.
Inlet Temperature	250 °C	Ensures rapid and complete vaporization of the analyte without thermal degradation.
Injection Mode	Split (50:1 ratio)	Prevents column overloading and ensures sharp peak shapes.
Injection Volume	1 µL	Standard volume for high-concentration samples.
Oven Program	80 °C (hold 1 min), ramp at 15 °C/min to 280 °C (hold 5 min)	Provides good separation from potential solvent impurities and related substances.
MS System	Agilent 5977 or equivalent	Industry-standard single quadrupole mass spectrometer.
Ionization Mode	Electron Ionization (EI) at 70 eV	Standardized energy that produces reproducible fragmentation patterns for library matching.[6]
Source Temperature	230 °C	Optimal temperature to maintain ionization efficiency and prevent contamination.

© 2026 BenchChem. All rights reserved.

Quadrupole Temp	150 °C	Ensures consistent mass filtering.
Scan Range	m/z 40-300	Covers the molecular ion and all expected significant fragments.

Data Interpretation and Fragmentation Analysis

Identifying the Molecular Ion ($M^{+}\bullet$)

The most critical peak in the mass spectrum is the molecular ion ($M^{+}\bullet$), which corresponds to the intact molecule minus one electron. For **3-Chloro-5-fluorobenzonitrile**, the monoisotopic mass is 154.9938 Da.[3]

A key confirmatory feature is the isotopic pattern imparted by chlorine.[10] Naturally occurring chlorine consists of two major isotopes: ^{35}Cl (~75.8%) and ^{37}Cl (~24.2%). This results in a characteristic $M^{+}\bullet$ peak and an "M+2" peak with a relative intensity ratio of approximately 3:1.[11]

Ion	Calculated m/z	Expected Relative Abundance
$[C_7H_3{}^{35}ClFN]^{+}\bullet$	155.0	100%
$[C_7H_3{}^{37}ClFN]^{+}\bullet$	157.0	~32%

The presence of this isotopic signature is a self-validating system, providing high confidence in the assignment of any chlorine-containing fragment.

Proposed EI Fragmentation Pathway

Under 70 eV EI conditions, the molecular ion is energetically unstable and undergoes fragmentation to produce smaller, stable ions.[12][13] The fragmentation of aromatic nitriles is well-documented and typically involves losses of the cyano group or halogen atoms.[11]

© 2026 BenchChem. All rights reserved.

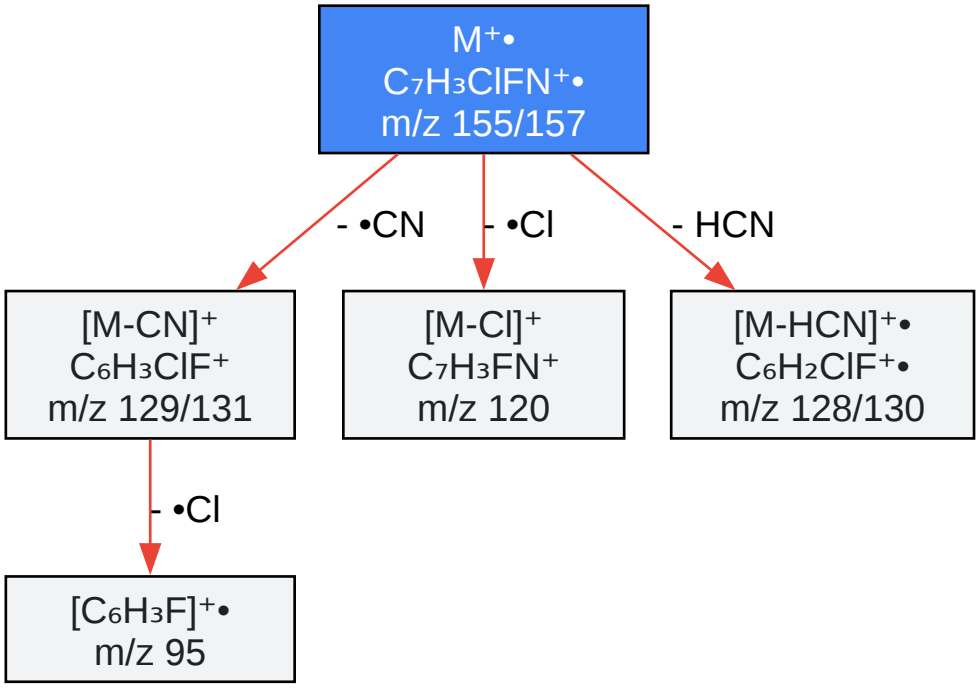

Click to download full resolution via product page

Caption: Proposed EI fragmentation pathway for **3-Chloro-5-fluorobenzonitrile**.

- m/z 155/157 (Molecular Ion): The parent ion, showing the characteristic 3:1 chlorine isotope pattern.
- m/z 129/131 ($[M-CN]^+$): Loss of a cyano radical (•CN), a common fragmentation for nitriles, resulting in a chlorofluorophenyl cation.[11] This fragment will retain the chlorine isotopic signature.
- m/z 120 ($[M-Cl]^+$): Loss of a chlorine radical (•Cl). This fragment will appear as a single peak, having lost the isotopic chlorine atom.
- m/z 128/130 ($[M-HCN]^+•$): Loss of a neutral hydrogen cyanide molecule, another characteristic pathway for benzonitriles.
- m/z 95 ($[C_6H_3F]^+•$): This fragment can arise from the m/z 129 ion via the loss of a chlorine radical, resulting in a fluorophenyl radical cation.

© 2026 BenchChem. All rights reserved.

Alternative Workflow: LC-MS/MS for Enhanced Sensitivity

Causality: While GC-MS is ideal for pure standards, LC-MS/MS is superior for analyzing **3-Chloro-5-fluorobenzonitrile** in complex matrices (e.g., biological fluids, environmental samples) or when ultra-low detection limits are required.[10][14] Electrospray Ionization (ESI) is a softer ionization technique, often preserving the molecular ion, while tandem mass spectrometry (MS/MS) provides exceptional selectivity.[8]

Recommended LC-MS/MS Parameters

© 2026 BenchChem. All rights reserved.

Parameter	Recommended Setting	Rationale
LC System	Waters ACQUITY UPLC or equivalent	High-pressure system for fast, efficient separations.
Column	Waters ACQUITY BEH C18 (50 mm x 2.1 mm, 1.7 µm)	Standard reversed-phase chemistry for small molecule analysis.
Mobile Phase A	Water + 0.1% Formic Acid	Acid modifier promotes protonation for positive ion ESI.
Mobile Phase B	Acetonitrile + 0.1% Formic Acid	Common organic solvent for reversed-phase LC.
Gradient	5% B to 95% B over 5 minutes	A generic gradient suitable for initial screening.
Flow Rate	0.4 mL/min	Appropriate for a 2.1 mm ID column.
Column Temp	40 °C	Ensures reproducible retention times.
MS System	Sciex Triple Quad 6500+ or equivalent	High-sensitivity tandem mass spectrometer.
Ionization Mode	ESI Positive	The nitrile group can be protonated to form $[M+H]^+$.
$[M+H]^+$ Ion	m/z 156/158	Protonated molecular ion.
Acquisition Mode	Multiple Reaction Monitoring (MRM)	For high selectivity and sensitivity in quantitative analysis.[10]
MRM Transitions	Precursor m/z 156 -> Product Ion 1 (e.g., 129); Precursor m/z 156 -> Product Ion 2 (e.g., 120)	Specific transitions are determined by infusing the standard and optimizing collision energy.

© 2026 BenchChem. All rights reserved.

Conclusion

The analysis of **3-Chloro-5-fluorobenzonitrile** is effectively accomplished using mass spectrometry coupled with either gas or liquid chromatography. A GC-MS method utilizing electron ionization provides definitive structural confirmation through reproducible fragmentation patterns and the unmistakable chlorine isotopic signature. For applications requiring higher sensitivity or analysis within complex sample matrices, an LC-MS/MS method with electrospray ionization and MRM acquisition offers a powerful and robust alternative. The methodologies and insights presented in this guide provide a validated framework for the accurate and reliable characterization of this important chemical intermediate.

References

- MSDS of **3-chloro-5-fluorobenzonitrile**. (2008-11-06).
- PubChem. (n.d.). **3-Chloro-5-fluorobenzonitrile**. National Center for Biotechnology Information. Retrieved from: [Link]
- Roullier, L., et al. (2020). LCMS-guided detection of halogenated natural compounds. Marine Drugs. Available at: [Link]
- Roullier, L., et al. (2016). Automated Detection of Natural Halogenated Compounds from LC-MS Profiles-Application to the Isolation of Bioactive Chlorinated Compounds from Marine-Derived Fungi. Analytical Chemistry. Available at: [Link]
- Biocompare. (2019). Prepping Small Molecules for Mass Spec. Retrieved from: [Link]
- Mass Spectrometry Research Facility. (n.d.). Sample Preparation Protocol for Open Access MS. Retrieved from: [Link]
- Nisikawa, M., et al. (2018). Quantitative and Qualitative Analysis of Organic Halogenated Compounds Unintentionally Generated in Wastewater Treatment Plants using Liquid Chromatography/Mass Spectrometry and High-Resolution Mass Spectrometry. Journal of Health Science. Available at: [Link]
- Tecan. (n.d.). How to choose a small molecule extraction method and develop a protocol for LC-MSMS sample prep. Retrieved from: [Link]

© 2026 BenchChem. All rights reserved.

- Léon, A., et al. (2016). Automated Detection of Natural Halogenated Compounds from LC-MS Profiles–Application to the Isolation of Bioactive Chlorinated Compounds from Marine-Derived Fungi. Analytical Chemistry. Available at: [Link]
- Organomation. (n.d.). Mass Spectrometry Sample Preparation Guide. Retrieved from: [Link]
- Wikipedia. (n.d.). Sample preparation in mass spectrometry. Retrieved from: [Link]
- Cheméo. (n.d.). Chemical Properties of 3-Chloro-4-fluorobenzonitrile (CAS 117482-84-5). Retrieved from: [Link]
- University of Arizona. (n.d.). Mass Spectrometry: Fragmentation. Retrieved from: [Link]
- eGyanKosh. (n.d.). MASS SPECTROMETRY: FRAGMENTATION PATTERNS. Retrieved from: [Link]
- ResearchGate. (n.d.). Fragmentation pathway involving the nitrile form of diethyl-2-cyano-3-methyl-2-pentenodiate. Retrieved from: [Link]
- Chemistry LibreTexts. (2023). Mass Spectrometry - Fragmentation Patterns. Retrieved from: [Link]
- Clark, J. (n.d.). FRAGMENTATION PATTERNS IN THE MASS SPECTRA OF ORGANIC COMPOUNDS. Chemguide. Retrieved from: [Link]
- ResearchGate. (2006). Reduction of nitriles to amines in positive ion electrospray ionization mass spectrometry. Retrieved from: [Link]
- NIST. (n.d.). Benzonitrile, 3-chloro-2-fluoro-. NIST Chemistry WebBook. Retrieved from: [Link]
- Chemistry LibreTexts. (2020). 16.10: Fragmentation Patterns in Mass Spectra. Retrieved from: [Link]
- YouTube. (2022). Lec-34 || Mass Fragmentation Pattern of Nitriles || McLafferty rearrangement || Nitrogen rule. Retrieved from: [Link]

© 2026 BenchChem. All rights reserved.

- ACS Publications. (2024). Accelerated and Green Synthesis of N,S- and N,O-Heterocycles in Microdroplets. The Journal of Organic Chemistry. Retrieved from: [Link]
- PubMed. (2006). Reduction of nitriles to amines in positive ion electrospray ionization mass spectrometry. Retrieved from: [Link]
- Shimadzu. (n.d.). Analysis of Volatile Hazardous Air Pollutants and Ozone Precursors Using the Cryofocusing GC-MS/MS (MRM) Method. Retrieved from: [Link]
- PubChemLite. (n.d.). **3-chloro-5-fluorobenzonitrile** (C7H3ClFN). Retrieved from: [Link]
- Longdom Publishing. (n.d.). Development of a Method for Regioisomer Impurity Detection and Quantitation within the Raw Material 3-Chloro-5-Fluorophenol by Gas Chromatography. Journal of Analytical & Bioanalytical Techniques. Retrieved from: [Link]
- PubChem. (n.d.). Benzonitrile, m-chloro-. National Center for Biotechnology Information. Retrieved from: [Link]

Need Custom Synthesis?

BenchChem offers custom synthesis for rare earth carbides and specific isotopiclabeling.

Email: info@benchchem.com or Request Quote Online.

Sources

- 1. 3-Chloro-5-fluorobenzonitrile 97 327056-73-5 [sigmaaldrich.com]
- 2. 3-Chloro-5-fluorobenzonitrile 97 327056-73-5 [sigmaaldrich.com]
- 3. 3-Chloro-5-fluorobenzonitrile | C7H3ClFN | CID 2734841 - PubChem [pubchem.ncbi.nlm.nih.gov]
- 4. capotchem.cn [capotchem.cn]
- 5. synquestlabs.com [synquestlabs.com]
- 6. Sample preparation in mass spectrometry - Wikipedia [en.wikipedia.org]
- 7. longdom.org [longdom.org]
- 8. organomation.com [organomation.com]

- 9. Sample Preparation Protocol for Open Access MS | Mass Spectrometry Research Facility [massspec.chem.ox.ac.uk]
- 10. pdf.benchchem.com [pdf.benchchem.com]
- 11. chemistry.miamioh.edu [chemistry.miamioh.edu]
- 12. chemguide.co.uk [chemguide.co.uk]
- 13. chem.libretexts.org [chem.libretexts.org]
- 14. biocompare.com [biocompare.com]

- To cite this document: BenchChem. [Introduction: The Analytical Imperative for 3-Chloro-5-fluorobenzonitrile]. BenchChem, [2026]. [Online PDF]. Available at: [https://www.benchchem.com/product/b1363421/docs#introduction-the-analytical-imperative-for-3-chloro-5-fluorobenzonitrile]

Disclaimer & Data Validity:

The information provided in this document is for Research Use Only (RUO) and is strictly not intended for diagnostic or therapeutic procedures. While BenchChem strives to provide accurate protocols, we make no warranties, express or implied, regarding the fitness of this product for every specific experimental setup.

Technical Support: The protocols provided are for reference purposes. Unsure if this reagent suits your experiment?

Need Industrial/Bulk Grade? Request Custom Synthesis Quote

BenchChem

Our mission is to be the trusted global source of essential and advanced chemicals, empowering scientists and researchers to drive progress in science and industry.

Contact

Address: 3281 E Guasti Rd

Ontario, CA 91761, United States

Phone: (601) 213-4426

Email: info@benchchem.com

Contact our Ph.D. Support Team for a compatibility check

© 2026 BenchChem. All rights reserved.