Quaternary Center Pyrrolidine Building Blocks: Synthetic Architectures and Medicinal Utility[1] [2]

Author: BenchChem Technical Support Team. **Date**: April 2026

Compound of Interest

Compound Name:	*3-(3-Bromo-5-fluorobenzyl)pyrrolidin-3-ol*
Cat. No.:	*B13622637*

Get Quote

Executive Summary

In the modern era of drug discovery, the "escape from flatland" is not merely a trend but a necessity for improving clinical success rates. Saturated heterocycles, particularly pyrrolidines, serve as critical vectors for increasing fraction aromatic (

) character, thereby enhancing solubility and reducing promiscuous binding. However, the true utility of the pyrrolidine scaffold is unlocked through the introduction of quaternary stereocenters (QSCs).

This technical guide dissects the strategic application of quaternary center pyrrolidine building blocks. We move beyond basic synthesis to explore how QSCs function as "conformational locks," restricting ring puckering to favor bioactive rotamers, and as "metabolic shields," blocking oxidative hotspots (e.g., CYP450

-hydroxylation).

Strategic Value: The Quaternary Advantage

© 2026 BenchChem. All rights reserved.

The introduction of a quaternary center into a pyrrolidine ring alters its physicochemical and biological profile through three primary mechanisms:

- Conformational Locking: Unsubstituted pyrrolidines undergo rapid pseudorotation. A QSC, particularly at the C2 (

) or C3 (

) position, creates a high energy barrier to inversion, effectively freezing the molecule in a specific envelope conformation. This pre-organization reduces the entropic penalty of binding to a protein target.

- Metabolic Blocking: The

  -carbon of amines is a primary site for metabolic degradation via oxidative deamination. Substitution with a quaternary center (e.g.,

  -methyl,

  -trifluoromethyl) eliminates the abstractable hydrogen, significantly extending half-life (

).

- Vectorial Projection: QSCs allow for the precise 3D projection of pharmacophores in vectors inaccessible to flat aromatic systems, exploiting novel IP space.

Table 1: Comparative Analysis of Quaternary Pyrrolidine Classes

© 2026 BenchChem. All rights reserved.

Class	Substitution Site	Key Structural Feature	Primary Medicinal Utility	Synthetic Complexity
-Quaternary	C2	Gem-disubstitution adj. to Nitrogen	Metabolic stability; Peptide mimetics	High (Steric hindrance)
-Quaternary	C3	Gem-disubstitution	Scaffold stiffening; -turn mimetics	Moderate (Cycloaddition)
Spirocyclic	C3/C4	Ring fusion at single carbon	3D globular shape; Novel IP	High (Specific precursors)
Fused-Ring	C3-C4	Bridgehead quaternary carbons	High rigidity; bicyclic systems	Very High

Synthetic Architectures & Methodologies[3][4][5][6][7]

We examine two dominant methodologies for constructing these architectures: the classic Self-Regeneration of Stereocenters (SRS) for

-functionalization and 1,3-Dipolar Cycloaddition for

-functionalization and spirocycles.

Methodology A: Self-Regeneration of Stereocenters (SRS)

Best for: Enantiopure

-quaternary prolines (e.g.,

-methyl proline). Concept: Direct alkylation of proline enolates leads to racemization. The SRS method, pioneered by Seebach, uses a temporary chiral auxiliary (an aminal or oxazolidinone)

© 2026 BenchChem. All rights reserved.

formed from the proline itself. This auxiliary "remembers" the chirality of the starting material and directs the incoming electrophile to the opposite face, regenerating the stereocenter.

Experimental Protocol: Synthesis of

-Allyl Proline via SRS

Note: This protocol utilizes a pivalaldehyde-derived oxazolidinone.

- Aminal Formation:
  - Reflux L-proline (10 mmol) with pivalaldehyde (15 mmol) in pentane using a Dean-Stark trap to remove water.
  - Mechanism:[1][2] Formation of the cis-fused bicyclic system (oxazolidinone). The tert-butyl group directs the subsequent enolization.
- Enolization:
  - Cool the solution of the bicyclic aminal (1 equiv) in dry THF to -78 °C under Argon.
  - Add LDA (Lithium Diisopropylamide, 1.1 equiv) dropwise. Stir for 30 min.
  - Critical Step: The bulky tert-butyl group forces the lithium enolate to form, while shielding one face of the ring.
- Stereoselective Alkylation:
  - Add Allyl Bromide (1.2 equiv) slowly to the enolate at -78 °C.
  - Allow to warm to -30 °C over 2 hours.
  - Outcome: The electrophile attacks trans to the tert-butyl group, regenerating the quaternary center with retention of relative configuration (after hydrolysis).
- Hydrolysis (Auxiliary Removal):
  - Treat the alkylated intermediate with aqueous HBr or acidic ion-exchange resin in refluxing water/ethanol.

© 2026 BenchChem. All rights reserved.

- Isolate the free amino acid via ion-exchange chromatography.

Methodology B: Catalytic 1,3-Dipolar Cycloaddition

Best for: Highly substituted pyrrolidines, spirocycles, and library generation. Concept: The reaction between an azomethine ylide (generated in situ) and an electron-deficient alkene (dipolarophile).[3][4] This [3+2] cycloaddition creates two C-C bonds and up to four stereocenters in a single step.

Experimental Protocol: Ag(I)-Catalyzed Spirocyclic Pyrrolidine Synthesis

Target: Spiro[oxindole-3,3'-pyrrolidine]

- Catalyst Preparation:
  - In a flame-dried flask, dissolve AgOAc (5 mol%) and Triphenylphosphine (
    , 6 mol%) in dry Toluene. Stir for 15 min to form the active complex.
- Dipole Generation:
  - Add the imino-ester precursor (derived from glycine methyl ester and an aldehyde) (1.0 equiv).
  - Add Triethylamine (
    , 1.2 equiv). The base deprotonates the imino-ester to form the azomethine ylide dipole.
- Cycloaddition:
  - Add the dipolarophile: 3-methyleneoxindole (1.1 equiv).
  - Stir at ambient temperature for 4-12 hours. Monitor by TLC.
  - Mechanism:[1][2][5] The Ag(I) coordinates the dipole, ensuring endo-selectivity. The ylide adds across the exocyclic double bond of the oxindole.
- Workup:

© 2026 BenchChem. All rights reserved.

- Filter through a celite pad to remove silver salts.
- Concentrate and purify via flash column chromatography (Hexane/EtOAc).

Visualization of Synthetic Logic

Diagram 1: Synthetic Decision Matrix

This flowchart guides the medicinal chemist in selecting the optimal synthetic route based on the desired substitution pattern and available starting materials.

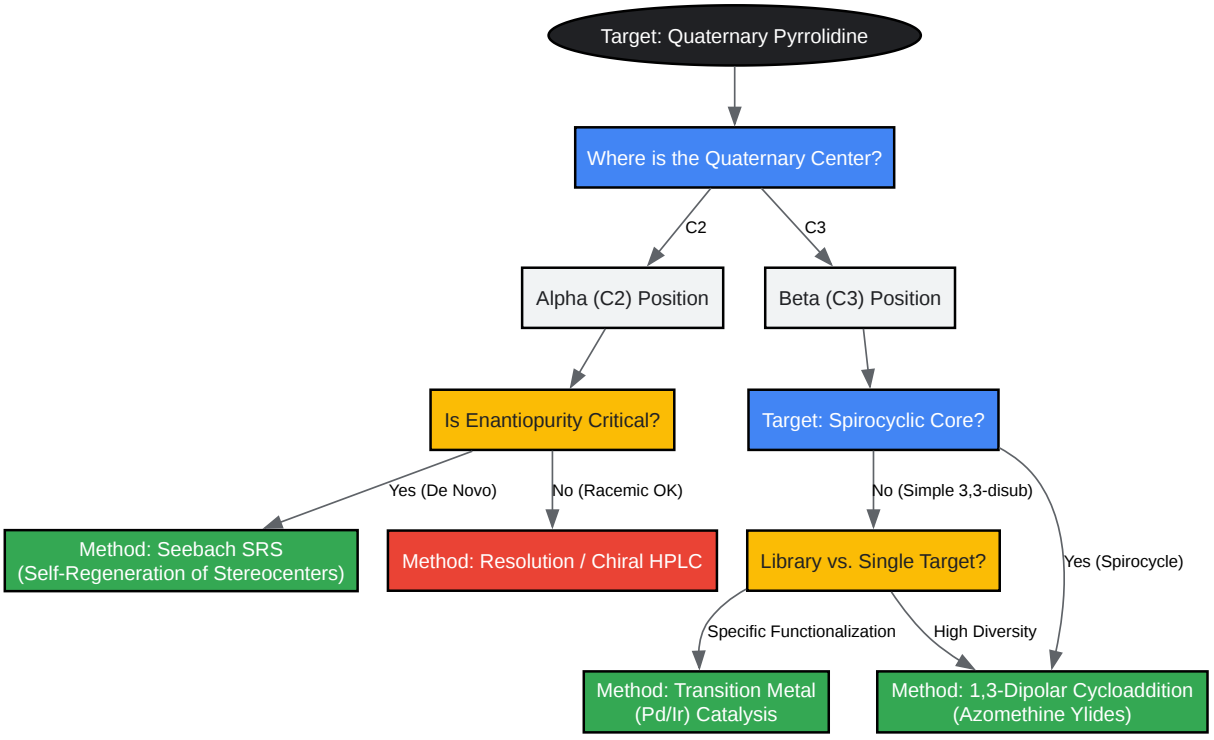

Click to download full resolution via product page

© 2026 BenchChem. All rights reserved.

Caption: Decision matrix for selecting synthetic methodologies based on regiochemistry and stereochemical requirements.

Diagram 2: Mechanism of Seebach's SRS (Memory of Chirality)

This diagram illustrates how the temporary ring system preserves stereochemical information during the harsh enolization step.

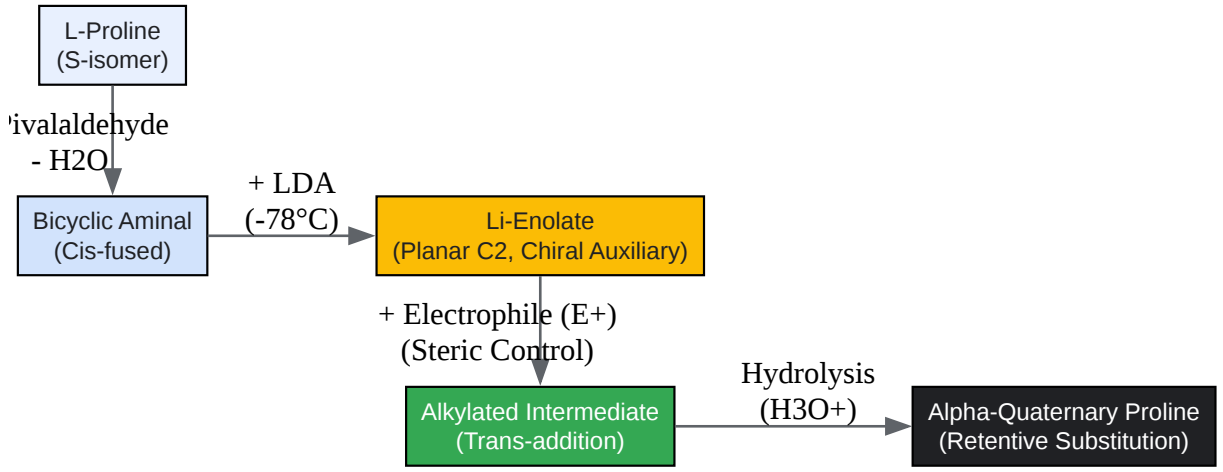

Click to download full resolution via product page

Caption: The Seebach SRS cycle. The auxiliary (blue nodes) enforces steric bias, directing the electrophile to the face opposite the bulky t-Butyl group.

Case Studies in Drug Discovery

Ledipasvir (HCV NS5A Inhibitor)

- Structure: Contains a unique spiro[2.4]heptane (cyclopropyl-fused pyrrolidine) motif.
- Role of Quaternary Center: The spiro-cyclopropyl group at the pyrrolidine C4/C5 position (depending on numbering convention) rigidifies the proline backbone. This rigidity is essential for the picomolar potency of the drug by locking the inhibitor into a conformation that matches the symmetry of the NS5A dimer.

© 2026 BenchChem. All rights reserved.

- Synthesis Insight: The spiro-ring is constructed early via alkylation of N-Boc-glycine with a 1,1-disubstituted cyclopropane electrophile, effectively building the pyrrolidine onto the quaternary center.

Sitafloxacin (Fluoroquinolone Antibiotic)

- Structure: Features a 7-amino-5-azaspiro[2.4]heptane substituent.
- Role of Quaternary Center: The spiro-cyclopropane ring at the pyrrolidine 3-position increases lipophilicity and steric bulk without adding excessive molecular weight. This modification improves activity against Gram-positive bacteria and reduces efflux compared to simple pyrrolidine analogs.

References

- Stereoselective Synthesis of Quaternary Proline Analogues. National Institutes of Health (PMC). Available at: [Link]
- Self-Regeneration of Stereocenters (SRS)—Applications, Limitations, and Abandonment of a Synthetic Principle. Angewandte Chemie / Semantic Scholar. Available at: [Link]
- Pyrrolidine in Drug Discovery: A Versatile Scaffold. International Journal of Molecular Sciences. Available at: [Link]
- Azomethine ylide 1,3-dipolar cycloaddition. Wikipedia. Available at: [Link]

Need Custom Synthesis?

BenchChem offers custom synthesis for rare earth carbides and specific isotopiclabeling.

Email: info@benchchem.com or Request Quote Online.

Sources

- 1. pubs.acs.org [pubs.acs.org]
- 2. youtube.com [youtube.com]
- 3. mdpi.com [mdpi.com]

- 4. Synthesis of spirocyclic pyrrolidines: advanced building blocks for drug discovery - Enamine [enamine.net]
- 5. iris.unipa.it [iris.unipa.it]
- To cite this document: BenchChem. [Quaternary Center Pyrrolidine Building Blocks: Synthetic Architectures and Medicinal Utility[1][2]]. BenchChem, [2026]. [Online PDF]. Available at: [https://www.benchchem.com/product/b13622637/docs#quaternary-center-pyrrolidine-building-blocks-synthetic-architectures-and-medicinal-utility-1-2]

Disclaimer & Data Validity:

The information provided in this document is for Research Use Only (RUO) and is strictly not intended for diagnostic or therapeutic procedures. While BenchChem strives to provide accurate protocols, we make no warranties, express or implied, regarding the fitness of this product for every specific experimental setup.

Technical Support: The protocols provided are for reference purposes. Unsure if this reagent suits your experiment?

Need Industrial/Bulk Grade? Request Custom Synthesis Quote

BenchChem

Our mission is to be the trusted global source of essential and advanced chemicals, empowering scientists and researchers to drive progress in science and industry.

Contact

Address: 3281 E Guasti Rd

Ontario, CA 91761, United States

Phone: (601) 213-4426

Email: info@benchchem.com

Contact our Ph.D. Support Team for a compatibility check

© 2026 BenchChem. All rights reserved.

© 2026 BenchChem. All rights reserved.