Buchwald-Hartwig amination of 3-Chloro-4-fluoro-2-methylpyridine

Author: BenchChem Technical Support Team. **Date**: May 2026

Compound of Interest

Compound Name: *3-Chloro-4-fluoro-2-methylpyridine*

Cat. No.: *B13622163*

Get Quote

Application Note: Regioselective Buchwald-Hartwig Amination of **3-Chloro-4-fluoro-2-methylpyridine**

Executive Summary: The Ortho-Halo/Para-Fluoro Conundrum

The amination of **3-Chloro-4-fluoro-2-methylpyridine** presents a classic "competing pathway" challenge in heterocyclic chemistry. This substrate contains two potential electrophilic sites:

- C3-Chlorine: The target for Palladium-catalyzed Buchwald-Hartwig amination. It is sterically hindered by the C2-methyl group and the C4-fluorine atom.
- C4-Fluorine: A highly activated site for Nucleophilic Aromatic Substitution (SNAr), driven by the para-nitrogen atom and the high electronegativity of fluorine.[1]

The Core Challenge: Under standard Buchwald-Hartwig conditions (strong base, polar solvent), the SNAr reaction at C4 dominates, leading to the unwanted 4-amino-3-chloro product. Furthermore, the steric bulk at C2 significantly retards oxidative addition at C3.

© 2026 BenchChem. All rights reserved.

The Solution: This protocol details a "Base-Controlled, Ligand-Accelerated" strategy. By utilizing specific bulky, electron-rich phosphine ligands (BrettPhos/RuPhos) and mild inorganic bases, we can accelerate the Pd-catalytic cycle at C3 while kinetically suppressing the background SNAr at C4.

Mechanistic Insight & Pathway Analysis

To achieve chemoselectivity, one must understand the kinetic competition. The diagram below illustrates the bifurcation between the desired Catalytic Cycle (Green) and the unwanted Thermal SNAr (Red).

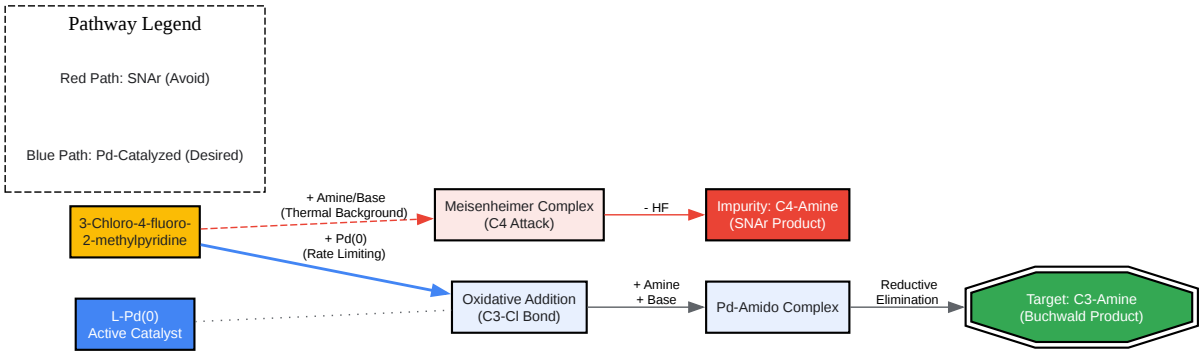

Click to download full resolution via product page

Figure 1: Kinetic bifurcation. Success depends on making the Blue Path (Oxidative Addition) faster than the Red Path (SNAr).

Optimized Protocol: C3-Selective Amination

Reaction Parameters

© 2026 BenchChem. All rights reserved.

Parameter	Recommendation	Scientific Rationale
Ligand	BrettPhos (Primary Amines)RuPhos (Secondary Amines)	Steric Demand: These ligands form mono-ligated Pd species that are highly active for oxidative addition into hindered Ar-Cl bonds (C3 is sandwiched).
Base	K_2CO_3 or K_3PO_4	SNAr Suppression: Strong bases (NaOtBu, LiHMDS) promote nucleophilic attack at C4-F. Weak carbonate/phosphate bases are sufficient for the Pd-cycle but minimize direct SNAr.
Solvent	t-Amyl Alcohol or Dioxane	Solubility/Polarity: t-Amyl alcohol solubilizes inorganic bases effectively at high temp without being nucleophilic enough to cause side reactions.
Precatalyst	Pd-G3/G4 Palladacycles	Activation: Ensures rapid generation of L-Pd(0) without an induction period, crucial for beating the SNAr background rate.

Experimental Procedure (Batch Scale: 1.0 mmol)

Materials:

- Substrate: **3-Chloro-4-fluoro-2-methylpyridine** (145.5 mg, 1.0 mmol)
- Amine: 1.2 equivalents (e.g., Morpholine or Aniline derivative)

© 2026 BenchChem. All rights reserved.

- Catalyst: BrettPhos Pd G4 (2-5 mol%) [For primary amines] OR RuPhos Pd G4 (2-5 mol%) [For secondary amines]
- Base: K_2CO_3 (anhydrous, 3.0 equiv, 414 mg)
- Solvent: t-Amyl Alcohol (anhydrous, 4.0 mL, 0.25 M)

Step-by-Step Workflow:

- Inert Setup: Equip a reaction vial (microwave vial or Schlenk tube) with a magnetic stir bar. Flame-dry or purge with Argon/Nitrogen for 5 minutes.
- Solids Addition: Add the Pd-Precatalyst, Ligand (if not using G3/G4 complex), Base (K_2CO_3), and Substrate (if solid) to the vial.
  - Critical: If the amine is a solid, add it now.
- Degassing: Seal the vial. Evacuate and backfill with Argon three times.
- Liquid Addition: Syringe in the anhydrous t-Amyl Alcohol. If the amine and substrate are liquids, add them now via syringe.
- Reaction: Heat the block/bath to 100 °C. Stir vigorously (1000 rpm).
  - Note: High stirring speed is essential for heterogeneous base systems.
- Monitoring (HPLC/LCMS): Sample at 1 hour and 4 hours.
  - Look for: Disappearance of SM (m/z 145) and formation of Product (m/z [M+Amine-Cl]).
  - Warning Sign: If you see a peak corresponding to [M+Amine-F], SNAr is occurring. Lower temperature to 80 °C and increase catalyst loading.
- Workup: Cool to room temperature. Dilute with EtOAc (20 mL). Filter through a pad of Celite to remove insoluble salts and Pd residue. Concentrate the filtrate.
- Purification: Flash column chromatography (Hexanes/EtOAc gradient).

© 2026 BenchChem. All rights reserved.

Troubleshooting & Optimization Matrix

Use this logic table to correct course if the "Standard Protocol" yields suboptimal results.

Observation	Root Cause	Corrective Action
High % of C4-Substitution (SNAr)	Base is too strong or Solvent is too polar.	1. Switch base to Cs_2CO_3. 2. Switch solvent to Toluene (non-polar solvents suppress SNAr). 3. Lower Temp to 80 °C.
No Reaction (SM Recovery)	Oxidative Addition failure due to sterics.	1. Increase Temp to 110-120 °C. 2. Switch to Ad-BrettPhos (extremely bulky). 3. Ensure strictly anhydrous conditions (water kills the catalyst).
De-chlorination (Hydrodehalogenation)	β-Hydride elimination or protodemetallation.	1. Use RuPhos (prevents β-elimination). 2. Ensure solvent is degassed thoroughly.[2]
Incomplete Conversion	Catalyst death.	1. Add a second portion of catalyst (1-2 mol%) after 4 hours.

References & Authoritative Grounding

- Mechanistic Foundations of C-N Coupling:
  - Paul, F., Patt, J., & Hartwig, J. F. "Palladium-catalyzed formation of carbon-nitrogen bonds. [3][4][5][6] Reaction intermediates and simplified procedures." J. Am. Chem. Soc.1994, 116, 5969. Link
- Ligand Selection for Hindered Substrates (BrettPhos/RuPhos):
  - Maitre, S., et al. "Buchwald-Hartwig Amination: A Review of Ligand Design." Catalysts2020, 10, 123.

© 2026 BenchChem. All rights reserved.

- Surry, D. S., & Buchwald, S. L. "Dialkylbiaryl phosphines in Pd-catalyzed amination: a user's guide." Chem. Sci.2011, 2, 27-50. Link

- Selectivity in Polyhalogenated Heterocycles:

  - Fier, P. S., & Hartwig, J. F. "Selective C-H Fluorination of Pyridines and Diazines." Science2013, 342, 956. (Provides context on the reactivity of fluoro-pyridines).

  - BenchChem Application Note: "Nucleophilic Aromatic Substitution (SNAr) Reactions on Fluoropyridines."[1] (Validates the high reactivity of C4-F).

Disclaimer: This protocol involves the use of transition metal catalysts and hazardous reagents. All experiments should be conducted in a fume hood with appropriate PPE.

Need Custom Synthesis?

BenchChem offers custom synthesis for rare earth carbides and specific isotopiclabeling.

Email: info@benchchem.com or Request Quote Online.

Sources

- 1. pdf.benchchem.com [pdf.benchchem.com]
- 2. pdf.benchchem.com [pdf.benchchem.com]
- 3. Palladium-Catalyzed C,N-Cross Coupling Reactions of 3-Halo-2-aminopyridines - PMC [pmc.ncbi.nlm.nih.gov]
- 4. Buchwald-Hartwig Amination - Wordpress [reagents.acsgcipr.org]
- 5. alfa-chemistry.com [alfa-chemistry.com]
- 6. chem.libretexts.org [chem.libretexts.org]
- To cite this document: BenchChem. [Buchwald-Hartwig amination of 3-Chloro-4-fluoro-2-methylpyridine]. BenchChem, [2026]. [Online PDF]. Available at: [https://www.benchchem.com/product/b13622163/docs#buchwald-hartwig-amination-of-3-chloro-4-fluoro-2-methylpyridine]

Disclaimer & Data Validity:

The information provided in this document is for Research Use Only (RUO) and is strictly not intended for diagnostic or therapeutic procedures. While BenchChem strives to provide accurate protocols, we make no warranties, express or implied, regarding the fitness of this product for every specific experimental setup.

Technical Support: The protocols provided are for reference purposes. Unsure if this reagent suits your experiment?

Need Industrial/Bulk Grade? Request Custom Synthesis Quote

BenchChem

Our mission is to be the trusted global source of essential and advanced chemicals, empowering scientists and researchers to drive progress in science and industry.

Contact

Address: 3281 E Guasti Rd

Ontario, CA 91761, United States

Phone: (601) 213-4426

Email: info@benchchem.com

Contact our Ph.D. Support Team for a compatibility check

© 2026 BenchChem. All rights reserved.