Comparative Guide: Tuning Reactivity in Substituted Cyclopropyl Ketones[1]

Author: BenchChem Technical Support Team. **Date**: February 2026

Compound of Interest		
Compound Name:	*2-Fluorophenyl cyclopropyl ketone*	
CAS No.:	*141030-72-0*	
Cat. No.:	*B136464*	*Get Quote*

Executive Summary

Cyclopropyl ketones are high-energy building blocks (

strain energy) that serve as linchpins in the synthesis of heterocycles (dihydrofurans, pyrroles) and complex carbon skeletons. Their reactivity is not monolithic; it is heavily modulated by the electronic nature of substituents on the ring (C2/C3) and the ketone moiety (C1-acyl).

This guide compares three distinct classes of cyclopropyl ketones:

- Donor-Acceptor (D-A) Cyclopropanes: Highly reactive, polarized C2–C3 bonds.[1][2]
- Aryl/Alkyl Cyclopropyl Ketones: Radical-responsive, moderate electrophilicity.
- Unactivated Cyclopropyl Ketones: Kinetic stability requiring harsh activation.

Mechanistic Foundation: The "Push-Pull" Effect

The reactivity of cyclopropyl ketones is governed by the interaction between the Walsh orbitals of the ring and the

orbital of the carbonyl group.

The Donor-Acceptor (D-A) Principle

© 2026 BenchChem. All rights reserved.

When an electron-donating group (EDG) is placed vicinal to the electron-withdrawing carbonyl (EWG), the ring bond between them becomes hyper-polarized. This "push-pull" effect lowers the activation energy for ring opening, allowing for mild catalytic transformations under Lewis acid or nucleophilic conditions.

Visualization: Activation Pathways

The following diagram illustrates the divergent mechanistic pathways accessible depending on the substitution pattern.

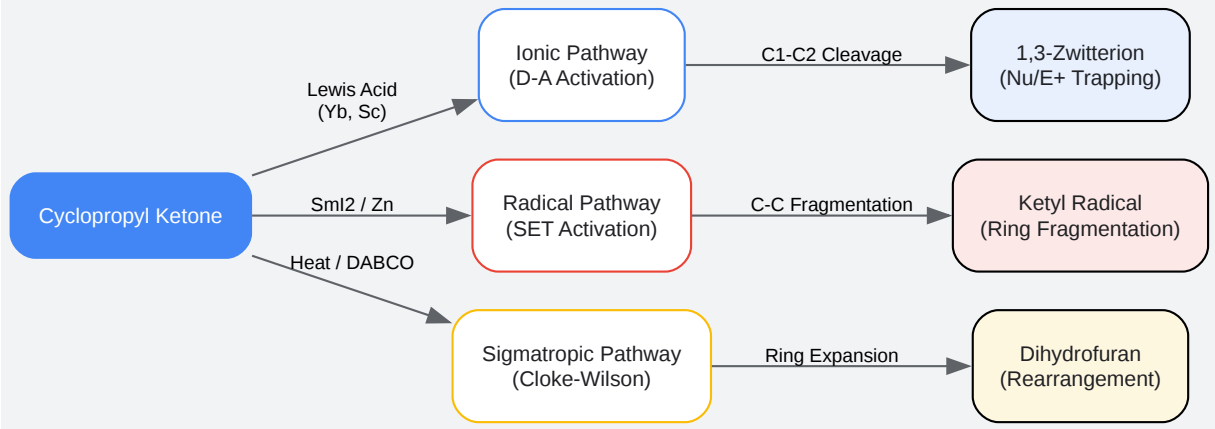

Click to download full resolution via product page

Caption: Divergent reaction manifolds for cyclopropyl ketones based on activation mode. Blue path requires D-A substitution; Red path favors aryl ketones.

Comparative Analysis: Reactivity Profiles

A. Nucleophilic Ring Opening (Homo-Michael Addition)

This reaction is critical for accessing 1,5-bifunctionalized compounds.

© 2026 BenchChem. All rights reserved.

Feature	D-A Cyclopropyl Ketones **(e.g., 2-Aryl)**	Simple Alkyl Cyclopropyl Ketones	2,2-Gem-Dimethyl Ketones
Reactivity	High. Opens at RT with weak Lewis Acids.	Low. Requires strong activation or harsh conditions.[3]	Moderate. Gem-dimethyl effect stabilizes cationic intermediates.
Regioselectivity	Excellent. Nucleophile attacks C2 (benzylic position).	Poor. Mixtures of C2/C3 attack unless sterically biased.	Good. Attack occurs at sterically accessible site.
Mechanism	SN2-like or SN1-like (stabilized carbocation).	SN2 (steric governance).	SN1 (tertiary cation stability).
Typical Yield	85–98%	40–60%	70–85%

Key Insight: For high-yield synthesis, 2-aryl substitution is superior because the phenyl ring stabilizes the developing positive charge during C1–C2 bond cleavage, directing the nucleophile exclusively to the C2 position.

B. Radical Coupling (SmI2-Mediated)

Samarium diiodide (

) promotes reductive coupling. The substituent on the ketone (not just the ring) plays a massive role here.[4]

- Aryl Ketones (Ar-CO-C3H5):
  - Performance: Excellent. The aryl group stabilizes the initial ketyl radical.[5]
  - Ortho-Substituent Effect: Ortho-substitution (e.g., o-tolyl) enhances reactivity by pre-twisting the molecule, destabilizing the ground state and facilitating the transition to the gauche styrene-like intermediate.[6]
- Alkyl Ketones (R-CO-C3H5):

© 2026 BenchChem. All rights reserved.

- Performance: Poor to Moderate.[7] The ketyl radical is high-energy and prone to reduction to an alcohol rather than ring opening.
- Optimization: Requires "Condition B" (addition of

) to regenerate the catalyst and prevent deactivation.

C. Cloke-Wilson Rearrangement

This rearrangement converts cyclopropyl ketones to dihydrofurans.[3][8][9]

- Thermal (Traditional): Requires

  . Low functional group tolerance.
- Lewis Base Catalyzed (DABCO):
  - Mechanism: Nucleophilic attack opens the ring to a zwitterion, followed by O-cyclization.
  - Substituent Requirement: Requires an electron-withdrawing group (EWG) on the ring to stabilize the anionic portion of the zwitterion. Unsubstituted rings do not react.

Experimental Protocols

Protocol A: Lewis Acid-Catalyzed Ring Opening (D-A Systems)

Targeting: 1,3-Aminothiolation of 2-Aryl Cyclopropyl Ketones

Rationale: Ytterbium triflate (

) acts as a mild oxophilic Lewis acid, coordinating to the ketone oxygen. This increases the electrophilicity of the C2 position, facilitating attack by soft nucleophiles like sulfenamides without polymerizing the substrate.

- Preparation: In a flame-dried Schlenk tube under Argon, dissolve 2-aryl cyclopropyl ketone (1.0 equiv) and sulfenamide (1.2 equiv) in anhydrous 1,2-dichloroethane (DCE) (

).

© 2026 BenchChem. All rights reserved.

- Catalyst Addition: Add

  (

).

- Reaction: Stir at room temperature for 4–12 hours. Monitor by TLC (the D-A cyclopropane spot will disappear; product is usually more polar).

- Workup: Quench with saturated aqueous

  . Extract with DCM (

). Dry combined organics over

  .

- Purification: Flash column chromatography (Hexanes/EtOAc).

Validation:

- Success Indicator: Disappearance of the cyclopropane protons (

  1.0–2.5 ppm) in

  NMR.

- Troubleshooting: If reaction is slow, heat to

  . If polymerization occurs, switch to a milder Lewis acid like

  .

Protocol B: SmI2-Catalyzed Radical Coupling

Targeting: Cyclopentene synthesis from Alkyl Cyclopropyl Ketones

Rationale: Alkyl ketones are less reactive. The addition of metallic Samarium (

) is crucial to maintain the active

species and prevent "catalyst death" caused by trace oxygen or background disproportionation.

© 2026 BenchChem. All rights reserved.

- Reagent Prep: Prepare a fresh

  solution of

  in THF.
- Setup: To a vial containing

  powder (1.0 equiv) and the alkyne/alkene partner (5.0 equiv), add the

  solution (

).
- Substrate Addition: Slowly add the alkyl cyclopropyl ketone (1.0 equiv) in THF.
- Reaction: Stir at ambient temperature. The deep blue color of

  should persist. If it turns yellow/white, the catalyst is dead (add more

).
- Quench: Open to air (solution turns yellow), then add

  .
- Workup: Standard ether extraction.

Mechanistic Visualization: Cloke-Wilson Rearrangement (Catalytic)

The following diagram details the DABCO-catalyzed pathway, highlighting the necessity of the zwitterionic intermediate which dictates the substituent requirements described in Section 3C.

© 2026 BenchChem. All rights reserved.

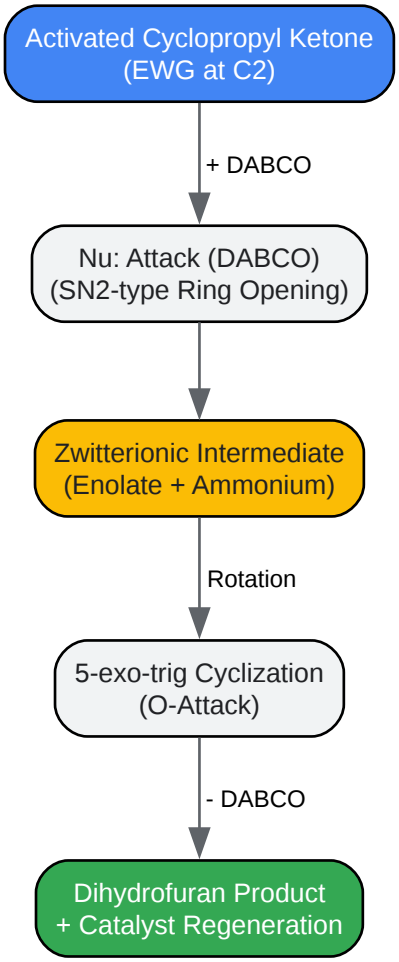

Click to download full resolution via product page

Caption: DABCO-catalyzed Cloke-Wilson rearrangement via zwitterionic intermediate.

References

- BenchChem. (2025).[10] A Comparative Guide to Ring-Opening Reactions of Substituted Cyclopropyl Ketones. BenchChem Application Notes. Link

- Werz, D. B., et al. (2024). Introduction to the Chemistry of Donor–Acceptor Cyclopropanes. Wiley-VCH.[7] Link

- Procter, D. J., et al. (2024). Computational Study of SmI2-Catalyzed Intermolecular Couplings of Cyclopropyl Ketones: Links between the Structure and Reactivity. ACS Publications.[11] Link

© 2026 BenchChem. All rights reserved.

- Guin, A., et al. (2020).[12] Lewis Acid Catalyzed Ring-Opening 1,3-Aminothiolation of Donor–Acceptor Cyclopropanes Using Sulfenamides.[12] Organic Letters.[11][12] Link

- Caballero, A., et al. (2024).[7] Mechanistic Insights into the DABCO-Catalyzed Cloke–Wilson Rearrangement: A DFT Perspective. Journal of Organic Chemistry.[9] Link

Need Custom Synthesis?

BenchChem offers custom synthesis for rare earth carbides and specific isotopiclabeling.

Email: info@benchchem.com or Request Quote Online.

Sources

- 1. papersflow.ai [papersflow.ai]
- 2. Exploring crystal-state vs. solution-based reactivity of donor–acceptor cyclopropanes [comptes-rendus.academie-sciences.fr]
- 3. researchgate.net [researchgate.net]
- 4. pdf.benchchem.com [pdf.benchchem.com]
- 5. Computational Study of SmI2-Catalyzed Intermolecular Couplings of Cyclopropyl Ketones: Links between the Structure and Reactivity - PMC [pmc.ncbi.nlm.nih.gov]
- 6. pubs.acs.org [pubs.acs.org]
- 7. epub.uni-regensburg.de [epub.uni-regensburg.de]
- 8. pubs.acs.org [pubs.acs.org]
- 9. pubs.acs.org [pubs.acs.org]
- 10. pdf.benchchem.com [pdf.benchchem.com]
- 11. pubs.acs.org [pubs.acs.org]
- 12. pubs.acs.org [pubs.acs.org]
- To cite this document: BenchChem. [Comparative Guide: Tuning Reactivity in Substituted Cyclopropyl Ketones[1]]. BenchChem, [2026]. [Online PDF]. Available at: [https://www.benchchem.com/product/b136464#comparing-the-reactivity-of-different-substituted-cyclopropyl-ketones]

© 2026 BenchChem. All rights reserved.

Disclaimer & Data Validity:

The information provided in this document is for Research Use Only (RUO) and is strictly not intended for diagnostic or therapeutic procedures. While BenchChem strives to provide accurate protocols, we make no warranties, express or implied, regarding the fitness of this product for every specific experimental setup.

Technical Support: The protocols provided are for reference purposes. Unsure if this reagent suits your experiment? [Contact our Ph.D. Support Team for a compatibility check]

Need Industrial/Bulk Grade? Request Custom Synthesis Quote

BenchChem

Our mission is to be the trusted global source of essential and advanced chemicals, empowering scientists and researchers to drive progress in science and industry.

Contact

Address: 3281 E Guasti Rd

Ontario, CA 91761, United States

Phone: (601) 213-4426

Email: info@benchchem.com

© 2026 BenchChem. All rights reserved.