An In-depth Technical Guide to 5-Cyclopentylthiophene-2-carbaldehyde

Author: BenchChem Technical Support Team. **Date**: May 2026

Compound of Interest

Compound Name:	*5-Cyclopentylthiophene-2-carbaldehyde*
CAS No.:	*959236-99-8*
Cat. No.:	*B1358220*

Get Quote

For Researchers, Scientists, and Drug Development Professionals

Abstract

This technical guide provides a comprehensive overview of **5-Cyclopentylthiophene-2-carbaldehyde** (CAS Number: 959236-99-8), a versatile heterocyclic aldehyde. This document details its physicochemical properties, proposed synthesis protocols, predicted spectroscopic data, chemical reactivity, and known applications, particularly within the realms of medicinal chemistry and materials science. By synthesizing information from analogous compounds and established chemical principles, this guide serves as a critical resource for researchers looking to utilize this valuable building block in their synthetic endeavors.

Introduction and Molecular Overview

5-Cyclopentylthiophene-2-carbaldehyde is an organosulfur compound featuring a thiophene ring substituted with a cyclopentyl group at the 5-position and a formyl (aldehyde) group at the 2-position. The thiophene moiety is a well-recognized "privileged scaffold" in medicinal chemistry, appearing in numerous FDA-approved drugs. Its bioisosteric relationship with the

© 2026 BenchChem. All rights reserved.

benzene ring allows for favorable interactions with biological targets while potentially modifying physicochemical properties like solubility and metabolic stability. The cyclopentyl group, a bulky and lipophilic substituent, can enhance binding affinity and modulate pharmacokinetic profiles. The aldehyde functional group serves as a reactive handle for a wide array of chemical transformations, making this compound a valuable intermediate in organic synthesis.[1][2]

Table 1: Physicochemical Properties of **5-Cyclopentylthiophene-2-carbaldehyde**[1][3]

Property	Value
CAS Number	959236-99-8
Molecular Formula	$C_{10}H_{12}OS$
Molecular Weight	180.3 g/mol
Appearance	Liquid
Purity	≥ 95% (by NMR)
Storage Conditions	0-8°C

Synthesis and Mechanistic Insights

While a specific, peer-reviewed synthesis of **5-Cyclopentylthiophene-2-carbaldehyde** is not readily available in the literature, a robust two-step synthetic route can be proposed based on well-established organometallic and formylation reactions. This pathway involves the initial synthesis of the precursor, 2-cyclopentylthiophene, followed by its formylation.

Proposed Synthesis of 2-Cyclopentylthiophene (Precursor)

The introduction of the cyclopentyl group onto the thiophene ring can be effectively achieved via a Friedel-Crafts alkylation reaction. Thiophene is an electron-rich heterocycle that readily undergoes electrophilic substitution.

Experimental Protocol:

© 2026 BenchChem. All rights reserved.

- To a stirred solution of thiophene (1.0 eq.) in a suitable inert solvent (e.g., dichloromethane or carbon disulfide) at 0°C, add a Lewis acid catalyst such as anhydrous aluminum chloride ($AlCl_3$) or stannic chloride ($SnCl_4$) (1.1 eq.). Stannic chloride is often preferred as it can reduce polymerization byproducts.[4]
- To this mixture, add cyclopentyl bromide or cyclopentyl chloride (1.05 eq.) dropwise, maintaining the temperature at 0°C.
- After the addition is complete, allow the reaction to slowly warm to room temperature and stir for 12-24 hours, monitoring the reaction progress by TLC or GC-MS.
- Upon completion, quench the reaction by carefully pouring it into a mixture of ice and concentrated hydrochloric acid.
- Separate the organic layer, and extract the aqueous layer with the reaction solvent.
- Combine the organic layers, wash with saturated sodium bicarbonate solution and brine, and then dry over anhydrous magnesium sulfate.
- Remove the solvent under reduced pressure and purify the crude product by vacuum distillation to yield 2-cyclopentylthiophene.

Causality and Expertise: The choice of a Lewis acid is critical. While $AlCl_3$ is a strong catalyst, it can lead to polymerization of the electron-rich thiophene. $SnCl_4$ offers a milder alternative, often providing a cleaner reaction profile. The reaction is performed at a low temperature to control the exothermicity and selectivity of the alkylation.

© 2026 BenchChem. All rights reserved.

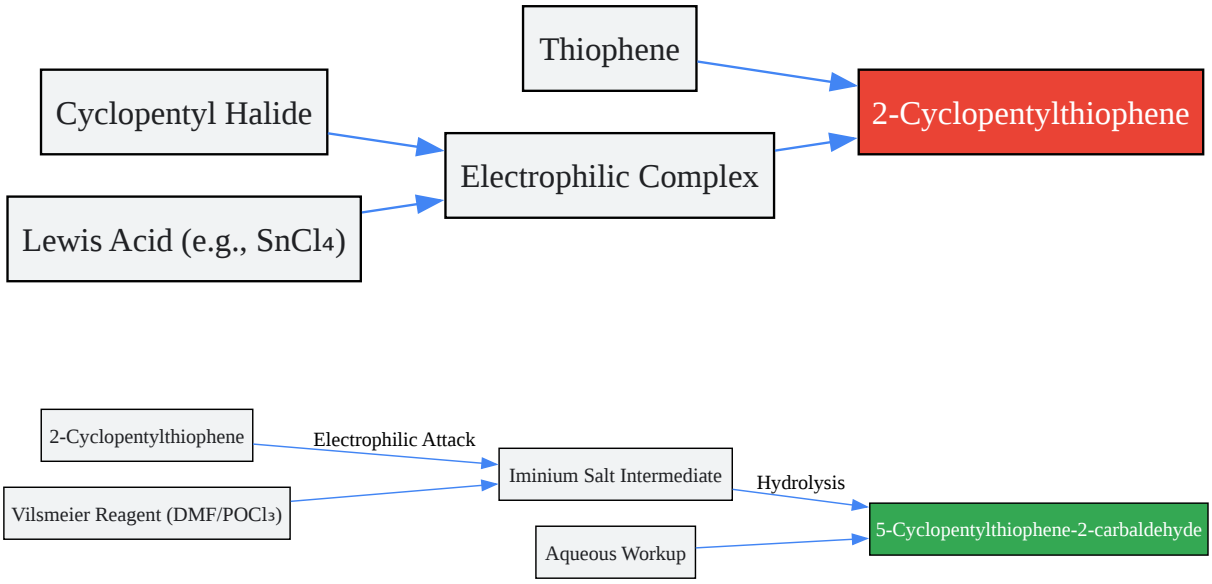

Click to download full resolution via product page

Need Custom Synthesis?

BenchChem offers custom synthesis for rare earth carbides and specific isotopiclabeling.

Email: info@benchchem.com or Request Quote Online.

Sources

- 1. Vilsmeier–Haack reaction - Wikipedia [en.wikipedia.org]
- 2. jk-sci.com [jk-sci.com]
- 3. chemimpex.com [chemimpex.com]
- 4. Organic Syntheses Procedure [orgsyn.org]
- To cite this document: BenchChem. [An In-depth Technical Guide to 5-Cyclopentylthiophene-2-carbaldehyde]. BenchChem, [2026]. [Online PDF]. Available at: [https://www.benchchem.com/product/b1358220/docs#an-in-depth-technical-guide-to-5-cyclopentylthiophene-2-carbaldehyde]

Disclaimer & Data Validity:

© 2026 BenchChem. All rights reserved.

The information provided in this document is for Research Use Only (RUO) and is strictly not intended for diagnostic or therapeutic procedures. While BenchChem strives to provide accurate protocols, we make no warranties, express or implied, regarding the fitness of this product for every specific experimental setup.

Technical Support: The protocols provided are for reference purposes. Unsure if this reagent suits your experiment?

Need Industrial/Bulk Grade? Request Custom Synthesis Quote

BenchChem

Our mission is to be the trusted global source of essential and advanced chemicals, empowering scientists and researchers to drive progress in science and industry.

Contact

Address: 3281 E Guasti Rd

Ontario, CA 91761, United States

Phone: (601) 213-4426

Email: info@benchchem.com

Contact our Ph.D. Support Team for a compatibility check

© 2026 BenchChem. All rights reserved.