Technical Support Center: Managing Reaction Temperature for Selective Pyridine Substitution

Author: BenchChem Technical Support Team. **Date**: May 2026

Compound of Interest

Compound Name:	*4-(2-Bromophenyl)pyridine*
CAS No.:	*101681-34-9*
Cat. No.:	*B1357770*

Get Quote

Welcome to the technical support center for pyridine functionalization. This guide is designed for researchers, scientists, and drug development professionals to navigate the complexities of achieving selective substitution on the pyridine ring, with a specific focus on the critical role of reaction temperature. Pyridine's unique electronic structure, characterized by an electron-deficient ring due to the electronegative nitrogen atom, presents distinct challenges in controlling regioselectivity.[1][2][3] This resource provides in-depth troubleshooting guides and frequently asked questions to address specific issues you may encounter during your experiments.

Troubleshooting Guide: Common Issues and Temperature-Focused Solutions

This section addresses common problems encountered during pyridine substitution reactions and provides systematic, temperature-centric approaches to resolve them.

Problem 1: Low or No Yield of the Desired Substituted Pyridine

Symptoms: Your reaction results in a low yield of the target product, or the starting material remains largely unreacted.

Root Cause Analysis: Low yields can stem from several factors, including reaction conditions that are not energetic enough to overcome the activation energy barrier, especially for electrophilic aromatic substitution (EAS) on the deactivated pyridine ring.[1][3]

Troubleshooting Workflow:

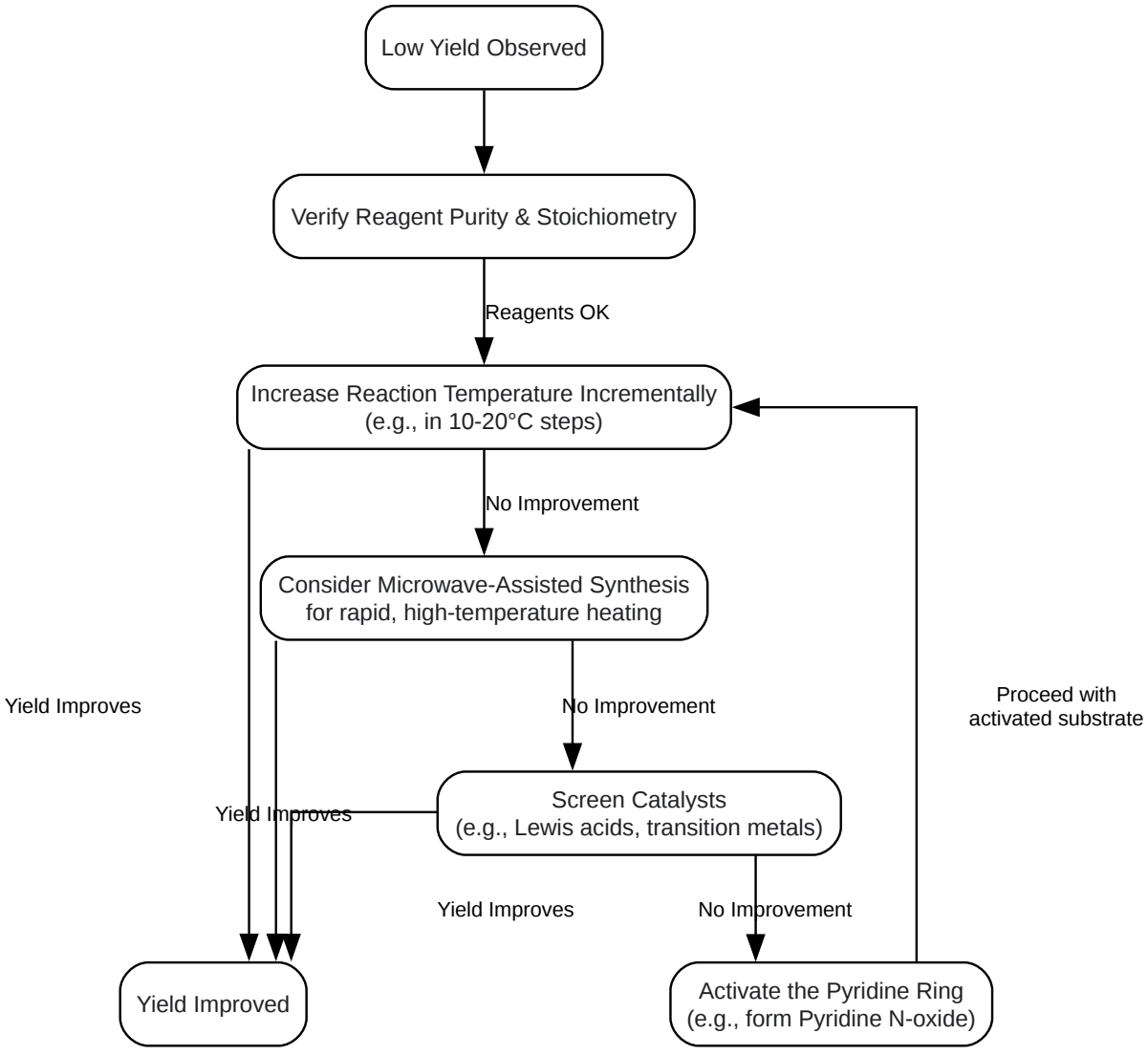

Click to download full resolution via product page

Caption: A troubleshooting workflow for addressing low yields in pyridine substitution reactions.

Detailed Solutions:

- Incrementally Increase Temperature: For sluggish reactions, particularly EAS, elevated temperatures are often necessary.[1] The sulfonation of pyridine, for example, requires a temperature of 220°C to proceed effectively.[1] Start by increasing the temperature in 10-20°C increments, monitoring the reaction progress by TLC or LC-MS to find the optimal balance between reaction rate and potential side product formation.

- Microwave-Assisted Organic Synthesis (MAOS): Microwave irradiation can provide rapid and uniform heating to high temperatures, often dramatically improving yields and reducing reaction times from hours to minutes.[4][5] This technique allows for precise temperature control and can help suppress undesired side reactions by minimizing the overall time the reaction mixture spends at high temperatures.[5]

- Activate the Pyridine Ring: If increasing the temperature leads to decomposition or unwanted byproducts, consider activating the pyridine ring. A common and highly effective strategy is the formation of a pyridine N-oxide.[1][3] The N-oxide is more reactive towards electrophiles and directs substitution to the C4 position.[1] The N-oxide can be subsequently deoxygenated to furnish the desired substituted pyridine.[3]

Problem 2: Poor Regioselectivity (Mixture of Isomers)

Symptoms: The reaction yields a mixture of substitution products (e.g., C2 vs. C4 in nucleophilic substitution, or C3 vs. other positions in radical substitution).

Root Cause Analysis: The regiochemical outcome of pyridine substitution is a delicate interplay of electronic effects, steric hindrance, and reaction conditions.[3] Temperature can influence the kinetic vs. thermodynamic control of a reaction, thereby altering the ratio of isomers formed.

- Nucleophilic Aromatic Substitution (SNAr): In SNAr reactions, nucleophiles preferentially attack the electron-deficient C2 and C4 positions because the negative charge of the Meisenheimer intermediate can be delocalized onto the electronegative nitrogen atom, providing significant stabilization.[1][6][7][8] The distribution between C2 and C4 products can be influenced by temperature.

© 2026 BenchChem. All rights reserved.

- Electrophilic Aromatic Substitution (EAS): EAS on pyridine is challenging but preferentially occurs at the C3 position, as the positive charge in the reaction intermediate does not get placed on the nitrogen atom.[1] However, harsh conditions can sometimes lead to a loss of selectivity.

- Radical Substitution: Radical reactions, such as the Minisci reaction, typically favor substitution at the C2 and C4 positions.[9] However, the product ratio can sometimes be tuned by modifying reaction conditions, including solvent and temperature.[2][10]

Strategies for Improving Regioselectivity:

Issue	Recommended Temperature Adjustment	Rationale
Undesired C4-substitution in SNAr	Lower the reaction temperature (e.g., from room temp. to 0°C or -78°C).[1][3]	Attack at the C2 position is often kinetically favored, while the C4-substituted product may be thermodynamically more stable. Lowering the temperature can favor the kinetic product.
Formation of multiple products in radical reactions	Optimize the reaction temperature by screening a range.	Temperature can influence the rate of competing radical pathways. A systematic screen (e.g., from 50°C to 100°C) may reveal an optimal temperature for the desired isomer.[4][11]
Loss of selectivity at high temperatures in EAS	Use the minimum temperature required for an acceptable reaction rate.	While high temperatures are often needed for EAS on pyridine, excessive heat can lead to side reactions and decreased selectivity.[1] Finding the "sweet spot" is crucial.

Experimental Protocol: Temperature Screening for Optimal Selectivity

© 2026 BenchChem. All rights reserved.

- Setup: Prepare multiple reaction vials with identical concentrations of starting materials, reagents, and solvent.
- Temperature Gradient: Place the vials in separate heating blocks or oil baths set to a range of temperatures (e.g., 60°C, 80°C, 100°C, 120°C).
- Monitoring: Monitor each reaction at set time points (e.g., 1h, 4h, 12h) by taking aliquots and analyzing them by ^{1}H NMR or LC-MS.
- Analysis: Determine the ratio of desired product to undesired isomers at each temperature and time point.
- Optimization: Identify the temperature that provides the best balance of conversion and selectivity for the desired product.

Frequently Asked Questions (FAQs)

Q1: How does temperature generally affect the regioselectivity of nucleophilic aromatic substitution on pyridines?

A1: In nucleophilic aromatic substitution (SNAr), the C2 and C4 positions are electronically favored due to the stabilization of the anionic Meisenheimer intermediate by the ring nitrogen.[1][7][8] Temperature can influence the ratio of C2 to C4 products by affecting the balance between kinetic and thermodynamic control. Often, substitution at the less sterically hindered C2 position is the kinetically favored pathway, while the C4 product may be the thermodynamically more stable isomer. Running the reaction at a lower temperature (e.g., -78°C) can often increase the proportion of the kinetic C2-substituted product.[1][3]

Q2: My electrophilic aromatic substitution (EAS) reaction is not working, even at elevated temperatures. What should I do?

A2: The pyridine ring is strongly deactivated towards electrophilic attack, and protonation of the nitrogen under acidic conditions further deactivates it.[1] If high temperatures (e.g., >200°C) are ineffective or lead to decomposition, the most effective strategy is to convert the pyridine to its N-oxide.[1][3] This transformation activates the ring towards EAS, particularly at the C4 position. The N-oxide group can be easily removed after the substitution reaction.[3]

© 2026 BenchChem. All rights reserved.

Q3: Can changing the solvent have a similar effect to changing the temperature in controlling selectivity?

A3: Yes, the choice of solvent is another critical parameter that can significantly influence regioselectivity, sometimes in conjunction with temperature. The solvent can affect the stability of reaction intermediates.[3] For instance, in some radical additions, changing the solvent from dichloromethane (DCM) to dimethyl sulfoxide (DMSO) can switch the selectivity between different positions on the pyridine ring.[1][10] It is often beneficial to screen both temperature and solvent to fully optimize a reaction for selectivity.

Q4: For palladium-catalyzed C-H functionalization of pyridines, is higher temperature always better?

A4: Not necessarily. While many Pd-catalyzed C-H activation reactions require elevated temperatures (e.g., 100-140°C) to proceed efficiently, an optimal temperature often exists.[12][13] Exceeding this optimal temperature may not improve the reaction efficiency and can lead to the formation of undesired side products, such as disubstituted or biphenyl products. It is crucial to perform temperature optimization studies to find the ideal conditions for your specific substrate and catalytic system.

Q5: What is the role of temperature in the Chichibabin reaction?

A5: The Chichibabin reaction, which involves the nucleophilic substitution of a hydrogen atom on the pyridine ring (typically at the C2 position) by an amide anion (e.g., from KNH_2), requires somewhat elevated temperatures to proceed.[6] The reaction involves the formation of a stable intermediate that requires energy to eliminate a hydride ion, which is a poor leaving group. The subsequent workup with water quenches the reaction.[6]

© 2026 BenchChem. All rights reserved.

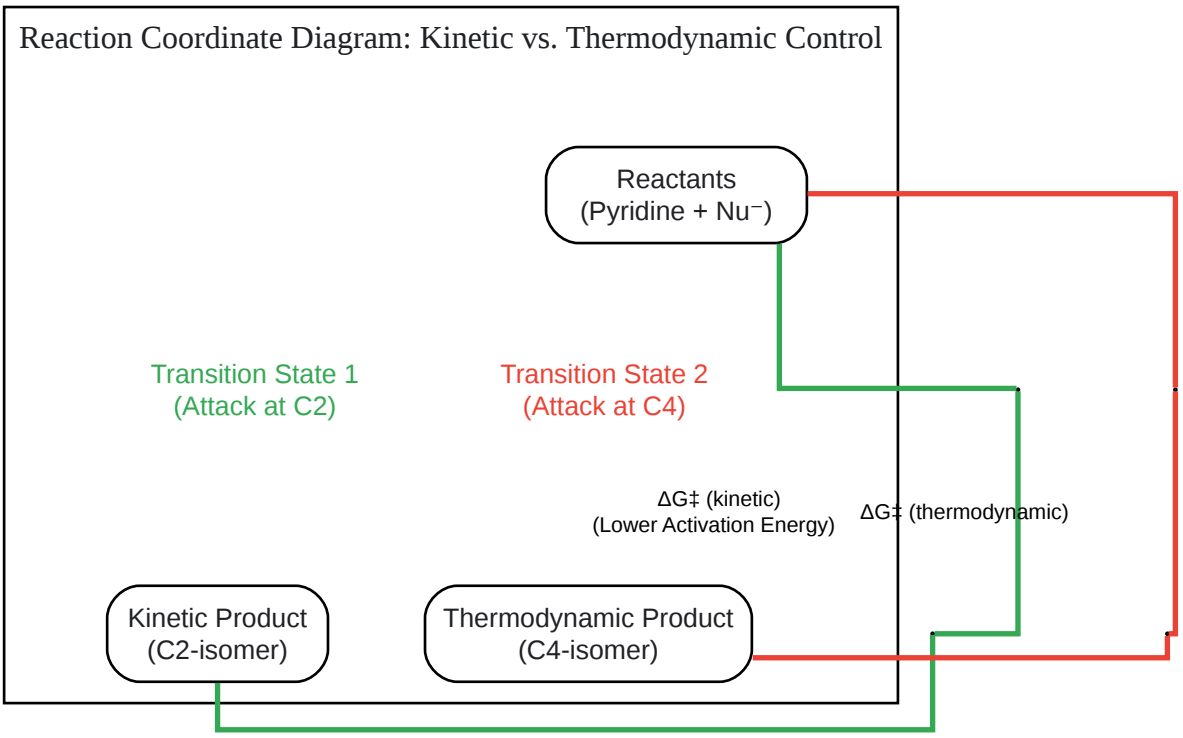

Click to download full resolution via product page

Caption: Energy profile illustrating kinetic vs. thermodynamic control in pyridine substitution.

References

- BenchChem. Technical Support Center: Troubleshooting Low Yield in Multicomponent Reactions of Pyridines.
- BenchChem. Technical Support Center: Improving Regioselectivity in Pyridine Substitution Reactions.
- CSIRO Publishing. Investigation of Selective Microwave Heating Phenomena in the Reactions of 2-Substituted Pyridines. Australian Journal of Chemistry. 2017.
- BenchChem. Challenges in the functionalization of the furopyridine ring.
- BenchChem. Technical Support Center: Regioselectivity in Substituted Pyridine Reactions.
- BenchChem. Troubleshooting poor regioselectivity in the synthesis of substituted pyridines.
- Sarchem Labs. Pyridine in Pharmaceutical Science and Medicinal Compound Synthesis.
- YouTube. Nucleophilic Aromatic Substitution of Heteroarenes. 2018.
- BenchChem. Optimizing reaction conditions for substituted pyridine synthesis.
- MDPI. Microwave-Assisted Synthesis of 1,4-Dihydropyridines via the Hantzsch Reaction Using a Recyclable HPW/PEG-400 Catalytic System.

© 2026 BenchChem. All rights reserved.

- ACS Publications. Synthesis of Pyridine and Dihydropyridine Derivatives by Regio- and Stereoselective Addition to N-Activated Pyridines. Chemical Reviews.
- RSC Publishing. Advanced Guareschi–Thorpe synthesis of pyridines in green buffer, and pH-controlled aqueous medium with ammonium carbonate. 2023.
- A brief review on the palladium-catalyzed C–H activation reactions of 2-phenylpyridines. 2025.
- Why does nucleophilic aromatic substitution occur at C-2 and C-4 of pyridine? 2018.
- ACS Publications. Green Protocol for the Novel Synthesis of Thiochromeno[4,3-b]pyridine and Chromeno[4,3-b]pyridine Derivatives Utilizing a High-Pressure System. ACS Omega. 2021.
- Organic Chemistry Portal. Pyridine synthesis.
- Beilstein Journals. Pyridine C(sp 2)–H bond functionalization under transition-metal and rare earth metal catalysis.
- ACS Publications. Palladium-Catalyzed C−H Functionalization of Pyridine N-Oxides: Highly Selective Alkenylation and Direct Arylation with Unactivated Arenes. Journal of the American Chemical Society.
- Open Access Journals. A Brief View on Pyridine Compounds.
- NIH. Radical-Based Regioselective C-H Functionalization of Electron-Deficient Heteroarenes: Scope, Tunability, and Predictability. PMC.
- ACS Publications. C–H Activation of Pyridines by Boryl Pincer Complexes: Elucidation of Boryl-Directed C–H Oxidative Addition to Ir and Discovery of Transition Metal-Assisted Reductive Elimination from Boron at Rh. Journal of the American Chemical Society.
- ECHEMI. Why does nucleophilic aromatic substitution occur at C-2 and C-4 of pyridine?
- BenchChem. Optimization of reaction conditions for syntheses involving Pyridine-2,6-d2.
- YouTube. (L-450) Nucleophilic aromatic substitution on Pyridine: Resonance, Mechanism and Selectivity. 2020.
- NIH. Practical and Regioselective Synthesis of C4-Alkylated Pyridines. PMC.

Need Custom Synthesis?

BenchChem offers custom synthesis for rare earth carbides and specific isotopiclabeling.

Email: info@benchchem.com or Request Quote Online.

Sources

- 1. pdf.benchchem.com [pdf.benchchem.com]

- 2. pdf.benchchem.com [pdf.benchchem.com]
- 3. pdf.benchchem.com [pdf.benchchem.com]
- 4. pdf.benchchem.com [pdf.benchchem.com]
- 5. mdpi.com [mdpi.com]
- 6. m.youtube.com [m.youtube.com]
- 7. chemistry.stackexchange.com [chemistry.stackexchange.com]
- 8. echemi.com [echemi.com]
- 9. pdf.benchchem.com [pdf.benchchem.com]
- 10. Radical-Based Regioselective C-H Functionalization of Electron-Deficient Heteroarenes: Scope, Tunability, and Predictability - PMC [pmc.ncbi.nlm.nih.gov]
- 11. Practical and Regioselective Synthesis of C4-Alkylated Pyridines - PMC [pmc.ncbi.nlm.nih.gov]
- 12. BJOC - Pyridine C(sp2)–H bond functionalization under transition-metal and rare earth metal catalysis [beilstein-journals.org]
- 13. pubs.acs.org [pubs.acs.org]

- To cite this document: BenchChem. [Technical Support Center: Managing Reaction Temperature for Selective Pyridine Substitution]. BenchChem, [2026]. [Online PDF]. Available at: [https://www.benchchem.com/product/b1357770/docs#technical-support-center-managing-reaction-temperature-for-selective-pyridine-substitution]

Disclaimer & Data Validity:

The information provided in this document is for Research Use Only (RUO) and is strictly not intended for diagnostic or therapeutic procedures. While BenchChem strives to provide accurate protocols, we make no warranties, express or implied, regarding the fitness of this product for every specific experimental setup.

Technical Support: The protocols provided are for reference purposes. Unsure if this reagent suits your experiment?

Need Industrial/Bulk Grade? Request Custom Synthesis Quote

© 2026 BenchChem. All rights reserved.

BenchChem

Our mission is to be the trusted global source of essential and advanced chemicals, empowering scientists and researchers to drive progress in science and industry.

Contact

Address: 3281 E Guasti Rd

Ontario, CA 91761, United States

Phone: (601) 213-4426

Email: info@benchchem.com

Contact our Ph.D. Support Team for a compatibility check

© 2026 BenchChem. All rights reserved.