Technical Application Note: Synthesis of Chiral Pyrrolidinones from (R)-Dimethyl Glutamate[1]

Author: BenchChem Technical Support Team. **Date**: May 2026

Compound of Interest	
Compound Name:	*(R)-dimethyl 2-aminopentanedioate*
CAS No.:	*16422-27-8*
Cat. No.:	*B1353371*

Get Quote

Executive Summary

This technical guide details the synthesis of chiral 5-substituted-2-pyrrolidinones using **(R)-dimethyl 2-aminopentanedioate** (D-Glutamic acid dimethyl ester) as the starting scaffold.[1] While the (S)-enantiomer (L-Glutamic acid) is the natural congener often cited in literature, the (R)-isomer is increasingly critical for stabilizing peptidomimetics against enzymatic degradation and developing specific "racetam" class pharmacophores.[1]

Core Challenge: The primary synthetic hurdle is racemization at the C2 chiral center during the cyclization (lactamization) process. This guide provides optimized protocols to maximize enantiomeric excess (

) while ensuring high yield.

Mechanistic Principles & Critical Control Points

The Cyclization Pathway

The transformation relies on an intramolecular nucleophilic acyl substitution. The

© 2026 BenchChem. All rights reserved.

-amino group attacks the

-ester carbonyl (C5), eliminating methanol to form the thermodynamically stable 5-membered lactam ring.

Key Insight: The reaction is driven by entropy (formation of a 5-membered ring) and enthalpy (formation of the stable amide bond). However, the

-ester remains unreacted under controlled conditions, yielding methyl (R)-5-oxopyrrolidine-2-carboxylate.[1]

The Racemization Risk (The "Silent Killer")

The C2 proton (at the chiral center) is

to both the ester carbonyl and the amine (or amide in the product). This makes it significantly acidic (

in esters, lower in lactams).[1]

- Risk Factor: Strong bases (e.g., Triethylamine, NaOMe) or excessive heat can deprotonate C2, leading to a planar enolate intermediate and subsequent racemization.[1]
- Mitigation: Use hindered bases (DIPEA) or catalytic weak acids, and strictly control temperature.[1]

Pathway Visualization

The following diagram illustrates the reaction pathway and the competing racemization risk.

© 2026 BenchChem. All rights reserved.

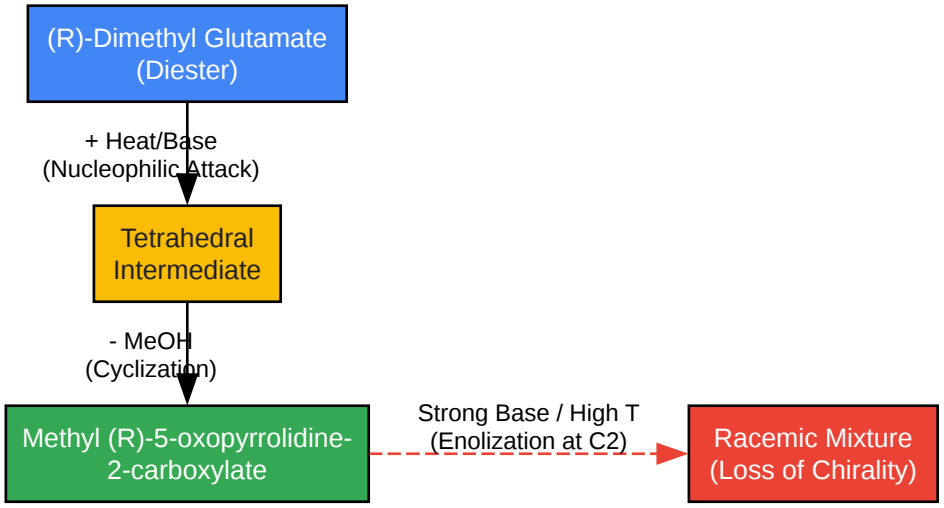

Click to download full resolution via product page

Figure 1: Mechanistic pathway for the cyclization of dimethyl glutamate, highlighting the critical racemization branch.[1]

Experimental Protocols

Protocol A: Thermal Cyclization (High Throughput)

Best for: Large-scale synthesis where minor ee loss (<2%) is acceptable.[1]

Reagents:

- **(R)-Dimethyl 2-aminopentanedioate** Hydrochloride (1.0 equiv)[1]
- Methanol (Anhydrous)[1]
- Triethylamine (Et

  N) or DIPEA (1.1 equiv)[1]

Procedure:

- Neutralization: Suspend the hydrochloride salt in anhydrous Methanol (5 mL/g). Cool to 0°C.
- Base Addition: Add DIPEA dropwise. Note: DIPEA is preferred over Et

© 2026 BenchChem. All rights reserved.

N as it reduces racemization risk due to steric hindrance.

- Cyclization: Allow the mixture to warm to room temperature, then reflux (65°C) for 4–6 hours.
- Monitoring: Monitor by TLC (SiO

  , 10% MeOH/DCM). Stain with Ninhydrin. The starting amine spot (purple) should disappear; the product (amide) absorbs weakly or stains faint yellow/white.[1]
- Workup: Concentrate in vacuo. Redissolve in DCM, wash with 0.1 N HCl (to remove amine salts), then Brine. Dry over Na

  SO

  .
- Purification: Recrystallize from EtOAc/Hexanes if necessary.

Yield Expectation: 85–92% Target Product: Methyl (R)-5-oxopyrrolidine-2-carboxylate.[1]

Protocol B: One-Pot Reductive Alkylation & Cyclization

Best for: Synthesis of N-substituted pyrrolidinones (e.g., Racetam analogs).[1]

This advanced protocol combines reductive amination with cyclization. The aldehyde reacts with the amine to form an imine, which is reduced; the resulting secondary amine then spontaneously cyclizes.

Workflow Diagram:

© 2026 BenchChem. All rights reserved.

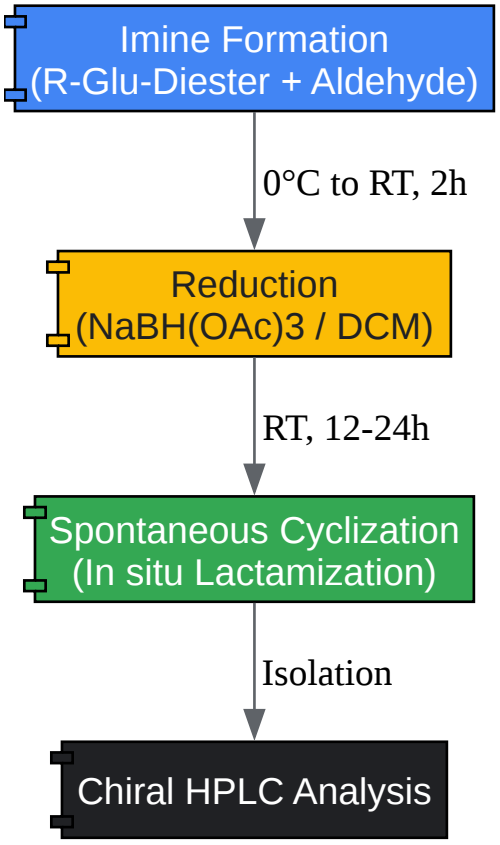

Click to download full resolution via product page

Figure 2: One-pot cascade synthesis for N-substituted chiral pyrrolidinones.

Procedure:

- Imine Formation: Dissolve (R)-dimethyl glutamate HCl (1.0 equiv) and the target Aldehyde (1.05 equiv) in 1,2-Dichloroethane (DCE) or DCM. Add DIPEA (1.0 equiv).[1] Stir for 1 hour.
- Reduction: Cool to 0°C. Add Sodium Triacetoxyborohydride (STAB, 1.4 equiv) portion-wise.
- Reaction: Stir at room temperature overnight. The secondary amine formed will often cyclize spontaneously due to the favorable proximity of the

  -ester.
- Forcing Conditions: If cyclization is incomplete (checked by LCMS), heat the mixture to 40°C or add a catalytic amount of acetic acid.

© 2026 BenchChem. All rights reserved.

Analytical Quality Control

To ensure the integrity of the (R)-configuration, chiral HPLC is mandatory.[1]

Parameter	Specification	Method
Purity	> 98%	HPLC (C18), UV 210 nm
Enantiomeric Excess	> 99% ee	Chiralpak AD-H or OD-H Column
Mobile Phase	Hexane : IPA (90:[1]10)	Isocratic flow, 1.0 mL/min
Retention Time	(R)-isomer typically elutes after (S)-isomer on AD-H	Verify with racemic standard

Note on Optical Rotation:

- (S)-Methyl pyroglutamate:

  (c=1, MeOH).[1]

- (R)-Methyl pyroglutamate:

  (c=1, MeOH).[1]

- Verification: Ensure the sign of rotation is positive (+) for the product derived from D-Glutamate.

Troubleshooting Guide

© 2026 BenchChem. All rights reserved.

Issue	Probable Cause	Corrective Action
Low Yield	Hydrolysis of ester groups	Ensure anhydrous solvents; avoid aqueous workup until cyclization is complete.
Racemization	Base too strong or Temp too high	Switch from Et N to DIPEA; reduce reflux temp; limit reaction time.
Incomplete Cyclization	Steric hindrance (if N-substituted)	Use toluene reflux with Dean-Stark trap to remove MeOH (equilibrium shift).[1]
Polymerization	Concentration too high	Perform reaction at high dilution (0.1 M or lower) to favor intramolecular reaction. [1]

References

- Mechanism of Pyroglutamate Formation: Schilling, S., et al. (2015).[1][2] Phosphate ions and glutaminyl cyclases catalyze the cyclization of glutaminyl residues.[2][3] Bioorganic Chemistry.[3][4][5] [1]
- Racemization Risks in Glutamate Derivatives: D'Arrigo, P., et al. (2020).[1] Synthesis of γ-Glutamyl Derivatives... via a Two-Step, One-Pot Procedure. Molecules.[3][4][5][6][7][8][9][10][11][12][13][14] [1]
- Synthesis of N-substituted Pyrrolidinones: Smith, A., et al. (2001).[1] Synthesis of N(1)-substituted analogues of (2R,4R)-4-amino-pyrrolidine-2,4-dicarboxylic acid. Bioorganic & Medicinal Chemistry Letters.[4]
- Commercial Standards & Properties: BenchChem Technical Guide. (R)-methyl oxirane-2-carboxylate and related chiral esters. [1]

© 2026 BenchChem. All rights reserved.

Need Custom Synthesis?

BenchChem offers custom synthesis for rare earth carbides and specific isotopiclabeling.

Email: info@benchchem.com or Request Quote Online.

Sources

- 1. Improved Synthesis of Chiral Pyrrolidine Inhibitors and Their Binding Properties to Neuronal Nitric Oxide Synthase - PMC [pmc.ncbi.nlm.nih.gov]
- 2. uniprot.org [uniprot.org]
- 3. Computational Studies on the Mechanisms of Nonenzymatic Intramolecular Cyclization of the Glutamine Residues Located at N-Termini Catalyzed by Inorganic Phosphate Species - PMC [pmc.ncbi.nlm.nih.gov]
- 4. Synthesis of N(1)-substituted analogues of (2R,4R)-4-amino-pyrrolidine-2,4-dicarboxylic acid as agonists, partial agonists, and antagonists of group II metabotropic glutamate receptors - PubMed [pubmed.ncbi.nlm.nih.gov]
- 5. Progress in the Stereoselective Synthesis Methods of Pyrrolidine-Containing Drugs and Their Precursors - PMC [pmc.ncbi.nlm.nih.gov]
- 6. pdf.benchchem.com [pdf.benchchem.com]
- 7. Crystal structures of human glutaminyl cyclase, an enzyme responsible for protein N-terminal pyroglutamate formation - PubMed [pubmed.ncbi.nlm.nih.gov]
- 8. researchgate.net [researchgate.net]
- 9. chemimpex.com [chemimpex.com]
- 10. JP2016523812A - Methods for increasing pyroglutamic acid formation of proteins - Google Patents [patents.google.com]
- 11. Chiral pyrrolidines via an enantioselective Hofmann-Löffler-Freytag reaction - PMC [pmc.ncbi.nlm.nih.gov]
- 12. A Brief Introduction to the Racemization of Amino Acids in Polypeptide Synthesis [en.highfine.com]
- 13. Structural and functional analysis of two glutamate racemase isozymes from Bacillus anthracis and implications for inhibitor design - PMC [pmc.ncbi.nlm.nih.gov]
- 14. WO2014161940A1 - A method for increasing pyro-glutamic acid formation of a protein - Google Patents [patents.google.com]

© 2026 BenchChem. All rights reserved.

- To cite this document: BenchChem. [Technical Application Note: Synthesis of Chiral Pyrrolidinones from (R)-Dimethyl Glutamate[1]]. BenchChem, [2026]. [Online PDF]. Available at: [https://www.benchchem.com/product/b1353371/docs#technical-application-note-synthesis-of-chiral-pyrrolidinones-from-r-dimethyl-glutamate-1]

Disclaimer & Data Validity:

The information provided in this document is for Research Use Only (RUO) and is strictly not intended for diagnostic or therapeutic procedures. While BenchChem strives to provide accurate protocols, we make no warranties, express or implied, regarding the fitness of this product for every specific experimental setup.

Technical Support: The protocols provided are for reference purposes. Unsure if this reagent suits your experiment?

Need Industrial/Bulk Grade? Request Custom Synthesis Quote

BenchChem

Our mission is to be the trusted global source of essential and advanced chemicals, empowering scientists and researchers to drive progress in science and industry.

Contact

Address: 3281 E Guasti Rd

Ontario, CA 91761, United States

Phone: (601) 213-4426

Email: info@benchchem.com

Contact our Ph.D. Support Team for a compatibility check

© 2026 BenchChem. All rights reserved.