Application Note: Quantitative Analysis of 2-Morpholinonicotinonitrile in Pharmaceutical Development

Author: BenchChem Technical Support Team. **Date**: May 2026

Compound of Interest

Compound Name:	*2-Morpholinonicotinonitrile*
CAS No.:	*59025-37-5*
Cat. No.:	*B1350431*

Get Quote

Abstract

This comprehensive guide details the development and validation of analytical methods for the precise quantification of **2-Morpholinonicotinonitrile**, a key intermediate in the synthesis of various active pharmaceutical ingredients (APIs). Recognizing the critical need for robust and reliable analytical procedures in drug development, this document provides detailed protocols for three common analytical techniques: High-Performance Liquid Chromatography with UV detection (HPLC-UV), Gas Chromatography-Mass Spectrometry (GC-MS), and UV-Vis Spectrophotometry. Each protocol is presented with a focus on the scientific rationale behind the chosen parameters and is designed to meet the stringent requirements of international regulatory bodies. This guide is intended for researchers, scientists, and drug development professionals, offering field-proven insights into method validation, sample preparation, and data interpretation, all grounded in the principles of scientific integrity and adherence to global standards.

© 2026 BenchChem. All rights reserved.

Introduction: The Importance of Quantifying 2-Morpholinonicotinonitrile

2-Morpholinonicotinonitrile is a pivotal chemical building block in modern pharmaceutical synthesis. The purity and concentration of this intermediate directly impact the yield, purity, and safety profile of the final API. Therefore, the ability to accurately quantify **2-Morpholinonicotinonitrile** in various matrices—from raw materials to in-process control samples and final product impurity profiles—is paramount. This application note serves as a practical guide to establishing and validating analytical methods that are fit for purpose, ensuring data integrity and regulatory compliance throughout the drug development lifecycle.

The methodologies presented herein are grounded in the principles outlined by the International Council for Harmonisation (ICH), particularly the Q2(R1) guideline on the validation of analytical procedures.[1][2][3] This ensures that the described methods are not only scientifically sound but also meet the global standards for accuracy, precision, specificity, linearity, and robustness.

Method Selection: A Rationale-Driven Approach

The choice of an analytical method is contingent on several factors, including the nature of the analyte, the sample matrix, the required sensitivity, and the intended application. For **2-Morpholinonicotinonitrile**, a multi-pronged analytical strategy is recommended.

- High-Performance Liquid Chromatography (HPLC-UV): As a versatile and widely used technique in the pharmaceutical industry, HPLC is well-suited for the analysis of non-volatile and thermally labile compounds. The presence of a chromophore in the nicotinonitrile ring system suggests that UV detection will be a viable and cost-effective quantification method.

- Gas Chromatography-Mass Spectrometry (GC-MS): For volatile impurities or when higher specificity is required, GC-MS is a powerful tool.[4][5] Due to the polarity of **2-Morpholinonicotinonitrile**, a derivatization step may be necessary to enhance its volatility and thermal stability for GC analysis.[6][7]

- UV-Vis Spectrophotometry: This technique offers a rapid and straightforward approach for quantifying the analyte in simpler matrices, such as in the analysis of bulk material or

© 2026 BenchChem. All rights reserved.

concentrated solutions, where high sensitivity is not the primary requirement.[8][9]

High-Performance Liquid Chromatography with UV Detection (HPLC-UV) Method

The HPLC-UV method is often the workhorse for quality control and stability testing in pharmaceutical manufacturing. Its robustness and reliability make it an ideal choice for the routine quantification of **2-Morpholinonicotinonitrile**.

Principle of HPLC-UV Analysis

This method utilizes reversed-phase chromatography, where the analyte is separated based on its partitioning between a non-polar stationary phase and a polar mobile phase. The separated **2-Morpholinonicotinonitrile** is then detected by a UV detector at a wavelength where it exhibits maximum absorbance. The resulting peak area is directly proportional to the concentration of the analyte in the sample.

Experimental Protocol: HPLC-UV

3.2.1. Instrumentation and Chromatographic Conditions

Parameter	Recommended Setting
HPLC System	Agilent 1260 Infinity II or equivalent
Column	C18, 250 mm x 4.6 mm, 5 µm particle size
Mobile Phase	Acetonitrile:Water (40:60, v/v)
Flow Rate	1.0 mL/min
Column Temperature	30 °C
Injection Volume	10 µL
UV Detection	275 nm
Run Time	10 minutes

3.2.2. Reagent and Standard Preparation

© 2026 BenchChem. All rights reserved.

- Mobile Phase Preparation: Mix 400 mL of HPLC-grade acetonitrile with 600 mL of ultrapure water. Filter through a 0.45 µm membrane filter and degas for 15 minutes in an ultrasonic bath.
- Diluent Preparation: Use the mobile phase as the diluent.
- Standard Stock Solution (1000 µg/mL): Accurately weigh 100 mg of **2-Morpholinonicotinonitrile** reference standard and transfer to a 100 mL volumetric flask. Dissolve in and dilute to volume with the diluent.
- Calibration Standards: Prepare a series of calibration standards by serially diluting the stock solution with the diluent to obtain concentrations in the range of 1 µg/mL to 100 µg/mL.

3.2.3. Sample Preparation

- For Drug Substance: Accurately weigh approximately 100 mg of the sample, transfer to a 100 mL volumetric flask, dissolve in and dilute to volume with the diluent. Further dilute as necessary to fall within the calibration range.
- For In-Process Samples: Dilute the sample with the diluent to an expected concentration within the calibration range.
- Filter all sample solutions through a 0.45 µm syringe filter before injection.

3.2.4. Analytical Procedure

- Equilibrate the HPLC system with the mobile phase until a stable baseline is achieved.
- Inject the diluent (as a blank) to ensure no interfering peaks are present.
- Inject the calibration standards in increasing order of concentration.
- Inject the sample solutions.
- Construct a calibration curve by plotting the peak area against the concentration of the calibration standards.

© 2026 BenchChem. All rights reserved.

- Determine the concentration of **2-Morpholinonicotinonitrile** in the samples from the calibration curve.

Method Validation Summary

The HPLC-UV method should be validated according to ICH Q2(R1) guidelines.[1][2][3] The following table summarizes the typical acceptance criteria for method validation parameters.

Validation Parameter	Acceptance Criteria
Specificity	No interference from blank, placebo, or known impurities at the retention time of the analyte.
Linearity (R^2)	≥ 0.999
Range	1 - 100 µg/mL
Accuracy (% Recovery)	98.0% - 102.0%
Precision (% RSD)	≤ 2.0%
Limit of Detection (LOD)	Signal-to-Noise ratio of 3:1
Limit of Quantitation (LOQ)	Signal-to-Noise ratio of 10:1
Robustness	No significant impact on results with small, deliberate variations in method parameters (e.g., flow rate ±0.1 mL/min, column temperature ±2°C, mobile phase composition ±2%).

HPLC-UV Workflow Diagram

© 2026 BenchChem. All rights reserved.

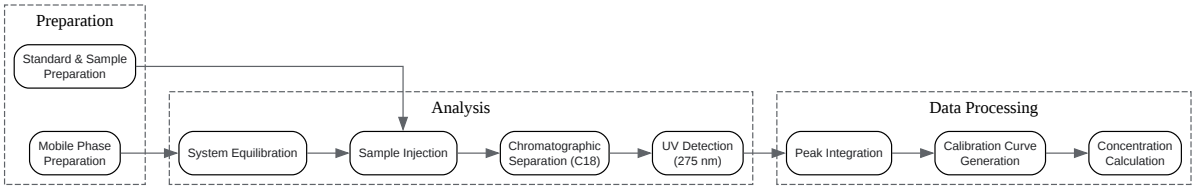

Click to download full resolution via product page

Caption: HPLC-UV analysis workflow for **2-Morpholinonicotinonitrile**.

Gas Chromatography-Mass Spectrometry (GC-MS) Method

The GC-MS method provides enhanced selectivity and sensitivity, making it particularly suitable for trace-level quantification and impurity profiling. Due to the polar nature of **2-Morpholinonicotinonitrile**, a derivatization step is proposed to improve its volatility and chromatographic behavior.

Principle of GC-MS Analysis

In this method, the analyte is first chemically modified (derivatized) to a more volatile and thermally stable form. The derivatized analyte is then introduced into the gas chromatograph, where it is vaporized and separated in a capillary column. The separated components enter the mass spectrometer, where they are ionized and fragmented. The mass spectrometer separates the ions based on their mass-to-charge ratio, providing a unique fragmentation pattern (mass spectrum) that confirms the identity of the analyte and a chromatographic peak that is used for quantification.[4]

Experimental Protocol: GC-MS

4.2.1. Instrumentation and GC-MS Conditions

© 2026 BenchChem. All rights reserved.

Parameter	Recommended Setting
GC-MS System	Agilent 7890B GC with 5977A MSD or equivalent
Column	HP-5MS, 30 m x 0.25 mm, 0.25 µm film thickness
Carrier Gas	Helium, 1.2 mL/min (constant flow)
Inlet Temperature	250 °C
Injection Mode	Splitless
Oven Program	100 °C (hold 2 min), ramp at 15 °C/min to 280 °C (hold 5 min)
Transfer Line Temp	280 °C
Ion Source Temp	230 °C
Quadrupole Temp	150 °C
Ionization Mode	Electron Ionization (EI), 70 eV
Acquisition Mode	Selected Ion Monitoring (SIM)
Quantifier Ion	To be determined from the mass spectrum of the derivatized analyte
Qualifier Ions	To be determined from the mass spectrum of the derivatized analyte

4.2.2. Reagent and Standard Preparation

- Derivatization Reagent: N,O-Bis(trimethylsilyl)trifluoroacetamide (BSTFA) with 1% Trimethylchlorosilane (TMCS).
- Solvent: Dichloromethane (DCM), HPLC grade.
- Standard Stock Solution (1000 µg/mL): Prepare as described in the HPLC-UV section, using DCM as the solvent.

© 2026 BenchChem. All rights reserved.

- Calibration Standards: Prepare a series of calibration standards by serially diluting the stock solution with DCM to obtain concentrations in the range of 0.1 µg/mL to 10 µg/mL.

4.2.3. Derivatization and Sample Preparation

- Pipette 1 mL of each standard and sample solution into separate 2 mL autosampler vials.
- Evaporate the solvent to dryness under a gentle stream of nitrogen at room temperature.
- Add 100 µL of BSTFA with 1% TMCS to each vial.
- Cap the vials tightly and heat at 70 °C for 30 minutes in a heating block.
- Cool the vials to room temperature before GC-MS analysis.

4.2.4. Analytical Procedure

- Set up the GC-MS system with the specified conditions.
- Inject 1 µL of the derivatized blank (DCM + derivatization reagent) to check for interferences.
- Inject 1 µL of each derivatized calibration standard.
- Inject 1 µL of each derivatized sample.
- Generate a calibration curve by plotting the peak area of the quantifier ion against the concentration.
- Quantify the analyte in the samples using the calibration curve.

Method Validation Summary

The GC-MS method should be validated according to ICH Q2(R1) guidelines.[1][2][3]

© 2026 BenchChem. All rights reserved.

Validation Parameter	Acceptance Criteria
Specificity	No interfering peaks at the retention time of the derivatized analyte; qualifier ion ratios within ±20% of the standard.
Linearity (R^2)	≥ 0.998
Range	0.1 - 10 µg/mL
Accuracy (% Recovery)	95.0% - 105.0%
Precision (% RSD)	≤ 5.0%
LOD & LOQ	To be determined experimentally based on signal-to-noise ratios.
Robustness	Insensitive to minor changes in oven temperature ramp rate, flow rate, and derivatization time.

GC-MS Workflow Diagram

© 2026 BenchChem. All rights reserved.

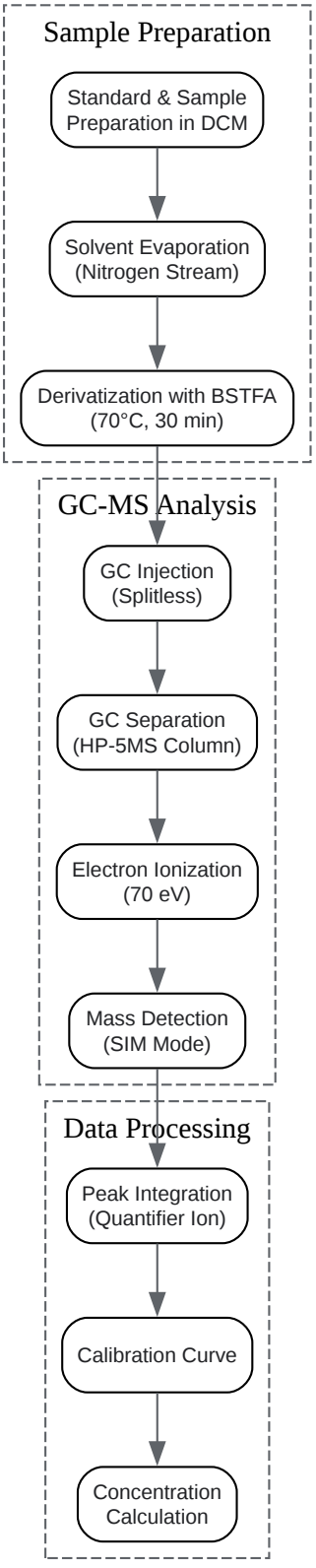

Click to download full resolution via product page

Caption: GC-MS analysis workflow including the derivatization step.

© 2026 BenchChem. All rights reserved.

UV-Vis Spectrophotometry Method

For a rapid estimation of **2-Morpholinonicotinonitrile** in pure form or in simple solutions, UV-Vis spectrophotometry is a valuable and accessible technique.

Principle of UV-Vis Spectrophotometry

This method is based on the Beer-Lambert Law, which states that the absorbance of a solution is directly proportional to the concentration of the absorbing species and the path length of the light through the solution. By measuring the absorbance of a solution at a specific wavelength (λmax), the concentration of the analyte can be determined.[10][11]

Experimental Protocol: UV-Vis

5.2.1. Instrumentation

Parameter	Recommended Setting
Spectrophotometer	Double-beam UV-Vis spectrophotometer
Cuvettes	1 cm quartz cuvettes
Scan Range	200 - 400 nm
Measurement λ	To be determined (λmax)

5.2.2. Reagent and Standard Preparation

- Solvent: Methanol, spectroscopic grade.
- Standard Stock Solution (100 µg/mL): Accurately weigh 10 mg of **2-Morpholinonicotinonitrile** reference standard and transfer to a 100 mL volumetric flask. Dissolve in and dilute to volume with methanol.
- Calibration Standards: Prepare a series of standards in the range of 2 µg/mL to 20 µg/mL by diluting the stock solution with methanol.

5.2.3. Analytical Procedure

© 2026 BenchChem. All rights reserved.

- Determination of λmax: Scan a 10 µg/mL standard solution from 200 nm to 400 nm against a methanol blank to determine the wavelength of maximum absorbance (λmax).
- Calibration Curve: Measure the absorbance of each calibration standard at the determined λmax using methanol as the blank.
- Sample Analysis: Prepare the sample solution in methanol to have an expected concentration within the calibration range. Measure the absorbance of the sample solution at λmax.
- Calculation: Calculate the concentration of the analyte in the sample using the equation of the line from the calibration curve.

Method Validation Summary

Validation Parameter	Acceptance Criteria
Specificity	The absorption spectrum of the analyte should be distinct from that of potential interfering substances.
Linearity (R^2)	≥ 0.999
Range	2 - 20 µg/mL
Accuracy (% Recovery)	98.0% - 102.0%
Precision (% RSD)	≤ 2.0%

UV-Vis Workflow Diagram

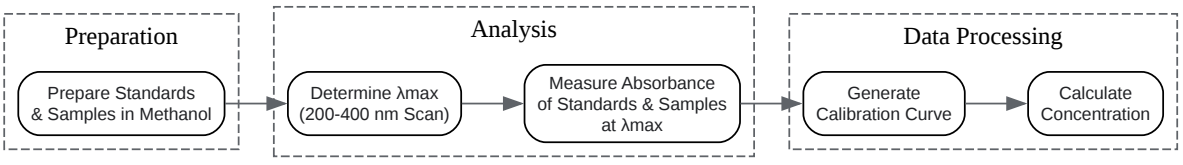

Click to download full resolution via product page

© 2026 BenchChem. All rights reserved.

Caption: UV-Vis spectrophotometry workflow for quantification.

Conclusion

The analytical methods detailed in this application note provide a robust framework for the quantification of **2-Morpholinonicotinonitrile** in a pharmaceutical development setting. The choice between HPLC-UV, GC-MS, and UV-Vis spectrophotometry will depend on the specific analytical requirements, including sensitivity, selectivity, and sample matrix complexity. Each method, when properly validated according to ICH guidelines, will yield reliable and accurate data, ensuring the quality and consistency of the drug development process. It is imperative that any selected method be fully validated for its intended use to ensure data integrity and regulatory compliance.

References

- ICH. (n.d.). Validation of Analytical Procedures: Text and Methodology Q2(R1). Jordi Labs. Retrieved from [Link]
- Altabrisa Group. (2025, July 30). 3 Key Regulatory Guidelines for Method Validation. Retrieved from [Link]
- ICH. (n.d.). ICH Harmonised Tripartite Guideline - Validation of Analytical Procedures: Text and Methodology Q2(R1). Retrieved from [Link]
- Distek, Inc. (2016, September 30). Analysis of Two Active Pharmaceutical Ingredients (API) Products Using UV Spectrophotometry with Multi-Component Analysis and a Fiber Optic Dissolution Analyzer. Retrieved from [Link]
- Hassaninejad-Darzi, S. K., Samadi-Maybodi, A., & Nikou, S. M. (n.d.). UV-Vis Spectrophotometry and Multivariate Calibration Method for Simultaneous Determination of Theophylline, Montelukast and Loratadine in Tablet Preparations and Spiked Human Plasma. PMC - PubMed Central. Retrieved from [Link]
- Khan, M. A., & Ali, A. (2018). High Resolution Rp-Hplc Method for The Determination of Nevirapine and Associated Impurities. Oriental Journal of Chemistry. Retrieved from [Link]

© 2026 BenchChem. All rights reserved.

- Shintani, H. (1993). Gas chromatography/tandem mass spectrometry measurement of delta 9-tetrahydrocannabinol, naltrexone, and their active metabolites in plasma. Therapeutic Drug Monitoring. Retrieved from [Link]
- The Organic Chemistry Tutor. (2022, October 3). GC-MS For Beginners (Gas Chromatography Mass Spectrometry). YouTube. Retrieved from [Link]
- Mthombeni, F. A., et al. (2021). Molecular Spectroscopic (FTIR and UV-Vis) and Hyphenated Chromatographic (UHPLC-qTOF-MS) Analysis and In Vitro Bioactivities of the Momordica balsamina Leaf Extract. PubMed Central. Retrieved from [Link]

Need Custom Synthesis?

BenchChem offers custom synthesis for rare earth carbides and specific isotopiclabeling.

Email: info@benchchem.com or Request Quote Online.

Sources

- 1. jordilabs.com [jordilabs.com]
- 2. altabrisagroup.com [altabrisagroup.com]
- 3. database.ich.org [database.ich.org]
- 4. youtube.com [youtube.com]
- 5. Gas chromatography/tandem mass spectrometry measurement of delta 9-tetrahydrocannabinol, naltrexone, and their active metabolites in plasma - PubMed [pubmed.ncbi.nlm.nih.gov]
- 6. pdf.benchchem.com [pdf.benchchem.com]
- 7. GC-MS Metabolomics Analysis | Thermo Fisher Scientific - HK [thermofisher.com]
- 8. americanpharmaceuticalreview.com [americanpharmaceuticalreview.com]
- 9. researchgate.net [researchgate.net]
- 10. Molecular Spectroscopic (FTIR and UV-Vis) and Hyphenated Chromatographic (UHPLC-qTOF-MS) Analysis and In Vitro Bioactivities of the Momordica balsamina Leaf Extract - PMC [pmc.ncbi.nlm.nih.gov]

© 2026 BenchChem. All rights reserved.

- 11. UV-Vis Spectrophotometry and Multivariate Calibration Method for Simultaneous Determination of Theophylline, Montelukast and Loratadine in Tablet Preparations and Spiked Human Plasma - PMC [pmc.ncbi.nlm.nih.gov]
- To cite this document: BenchChem. [Application Note: Quantitative Analysis of 2-Morpholinonicotinonitrile in Pharmaceutical Development]. BenchChem, [2026]. [Online PDF]. Available at: [https://www.benchchem.com/product/b1350431/docs#application-note-quantitative-analysis-of-2-morpholinonicotinonitrile-in-pharmaceutical-development]

Disclaimer & Data Validity:

The information provided in this document is for Research Use Only (RUO) and is strictly not intended for diagnostic or therapeutic procedures. While BenchChem strives to provide accurate protocols, we make no warranties, express or implied, regarding the fitness of this product for every specific experimental setup.

Technical Support: The protocols provided are for reference purposes. Unsure if this reagent suits your experiment?

Need Industrial/Bulk Grade? Request Custom Synthesis Quote

BenchChem

Our mission is to be the trusted global source of essential and advanced chemicals, empowering scientists and researchers to drive progress in science and industry.

Contact

Address: 3281 E Guasti Rd

Ontario, CA 91761, United States

Phone: (601) 213-4426

Email: info@benchchem.com

Contact our Ph.D. Support Team for a compatibility check

© 2026 BenchChem. All rights reserved.