Publish Comparison Guide: IR Spectroscopy of (3-Cyclohexylphenyl)boronic Acid

Author: BenchChem Technical Support Team. **Date**: April 2026

Compound of Interest

Compound Name:	*(3-Cyclohexylphenyl)boronic acid*
Cat. No.:	*B13474058*

Get Quote

Executive Summary & Technical Context

Target Compound: **(3-Cyclohexylphenyl)boronic acid** CAS: 380427-38-3 Molecular Formula: $C_{12}H_{17}BO_2$

This guide provides a rigorous comparative analysis of the infrared (IR) spectroscopy data for **(3-Cyclohexylphenyl)boronic acid**. In the absence of a pervasive public reference standard for this specific regioisomer, this document establishes a self-validating spectral framework. By synthesizing data from the parent Phenylboronic Acid (PBA), the Cyclohexyl substituent, and Meta-substituted analogs (e.g., 3-biphenylboronic acid), we define the critical spectral fingerprints required to authenticate this compound and distinguish it from its para-isomer (4-Cyclohexylphenyl)boronic acid.

Why This Comparison Matters

In drug discovery (e.g., Suzuki-Miyaura coupling precursors), distinguishing between regioisomers is critical. The meta (3-) vs. para (4-) substitution pattern significantly alters the electronic environment and steric bulk, impacting downstream catalytic efficiency and binding affinity. This guide empowers researchers to verify structural integrity using standard FT-IR instrumentation.

© 2026 BenchChem. All rights reserved.

Spectral Architecture & Predictive Analysis

The IR spectrum of **(3-Cyclohexylphenyl)boronic acid** is a superposition of three distinct vibrational domains. A valid sample must exhibit features from all three domains while adhering to the specific meta-substitution rules.

Domain 1: The Boronic Acid Headgroup (-$B(OH)_2$)

- O-H Stretching (3200–3450 cm^{-1}): Broad, intense band due to intermolecular hydrogen bonding. Note: Sharp peaks here indicate free -OH, often seen in dilute solution but rarely in solid state.
- B-O Stretching (1330–1350 cm^{-1}): The diagnostic "fingerprint" for boronic acids. This is a strong, broad band.
- Dehydration Warning: The appearance of a sharp band near 635 cm^{-1} (boroxine ring breathing) coupled with diminished O-H intensity indicates the formation of the cyclic anhydride (boroxine), a common degradation product in dry/heated samples.

Domain 2: The Cyclohexyl Substituent (Aliphatic)

- C-H sp^3 Stretching (2850–2930 cm^{-1}): Strong, sharp dual bands (symmetric and asymmetric). Crucial Differentiator: These bands are absent in the parent Phenylboronic acid.
- CH_2 Scissoring (~1450 cm^{-1}): A medium intensity band characteristic of the cyclohexane ring.

Domain 3: The Aromatic Core (Meta-Substitution)

- C-H Aromatic Stretching (>3000 cm^{-1}): Weak, sharp shoulder just above the aliphatic region.
- Ring Deformation (Fingerprint Region 650–900 cm^{-1}): This is the primary discriminator between the 3- (meta) and 4- (para) isomers.
  - Meta (3-substituted): Typically shows three bands in the 690–780 cm^{-1} range (due to C-H out-of-plane bending).

© 2026 BenchChem. All rights reserved.

- Para (4-substituted): Typically shows a single strong band near 800–850 cm^{-1}.

Comparative Data Table

The following table synthesizes experimental baselines to define the acceptance criteria for **(3-Cyclohexylphenyl)boronic acid**.

Spectral Region	Functional Group	(3-Cyclohexylphenyl)boronic Acid **(Target)**	Phenylboronic Acid **(Reference)**	(4-Cyclohexylphenyl)boronic Acid **(Alternative)**
3200–3450 cm^{-1}	O-H Stretch	Broad, Strong	Broad, Strong	Broad, Strong
3000–3100 cm^{-1}	C-H Stretch (sp^2)	Weak, Shoulder	Weak, Shoulder	Weak, Shoulder
2850–2930 cm^{-1}	C-H Stretch (sp^3)	Strong, Sharp (Cyclohexyl)	Absent	Strong, Sharp
1330–1350 cm^{-1}	B-O Asym.[1] Stretch	Strong, Broad	Strong (1340 cm^{-1})	Strong (1340 cm^{-1})
1440–1460 cm^{-1}	CH_2 Scissoring	Medium	Absent	Medium
690–780 cm^{-1}	C-H Out-of-Plane (OOP)	3 Bands (Meta pattern)	2 Bands (Mono pattern)	1 Strong Band (~820 cm^{-1})
630–650 cm^{-1}	Boroxine (Impurity)	Check for absence	Check for absence	Check for absence

> *Analyst Note: The presence of strong aliphatic peaks (2850–2930 cm^{-1}) plus the meta-substitution pattern in the fingerprint region (690–780 cm^{-1}) confirms the identity of the 3-isomer. If the spectrum shows a single strong band >800 cm^{-1}, the sample is likely the 4-isomer.*

© 2026 BenchChem. All rights reserved.

Structural Logic & Signaling Diagram

The following diagram visualizes the logical flow for interpreting the IR spectrum to confirm the structure.

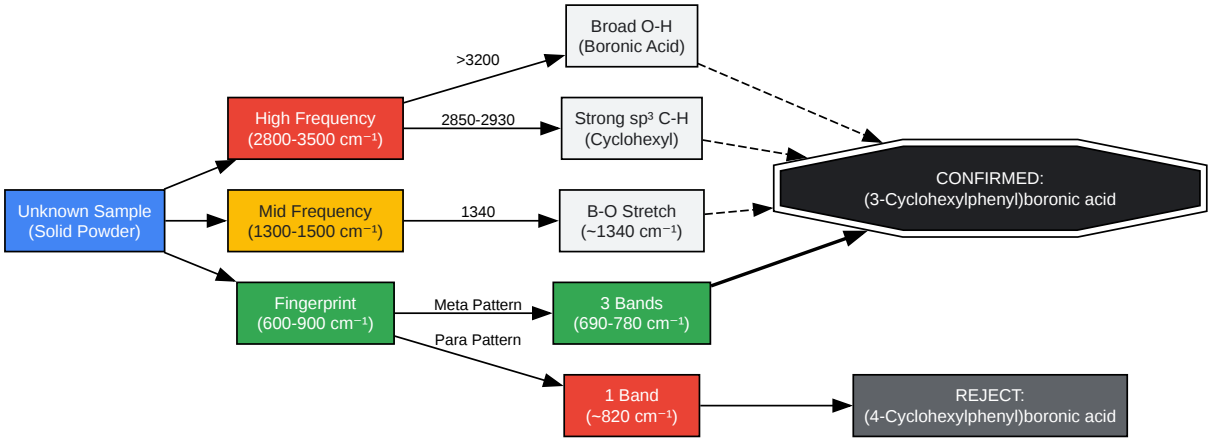

Click to download full resolution via product page

Caption: Logical decision tree for validating **(3-Cyclohexylphenyl)boronic acid** via IR spectroscopy, highlighting the critical differentiation path in the fingerprint region.

Experimental Protocol: Ensuring Data Integrity

Boronic acids are hygroscopic and prone to dehydration (forming boroxines). The following protocol ensures the spectrum represents the acid form, not the anhydride.

Method A: KBr Pellet (Gold Standard for Solids)

- Preparation: Mix 1–2 mg of **(3-Cyclohexylphenyl)boronic acid** with ~100 mg of dry, spectroscopic-grade KBr.
- Grinding: Grind gently in an agate mortar. Critical: Do not over-grind; excessive heat/energy can induce partial dehydration to the boroxine.

© 2026 BenchChem. All rights reserved.

- Pressing: Press into a transparent pellet under vacuum (to remove moisture).
- Verification: Immediately scan the spectrum.
  - Quality Check: If the O-H band at 3300 cm^{-1} is weak and a sharp band appears at ~635 cm^{-1}, the sample has dehydrated. Re-prep with less grinding energy or use Method B.

Method B: ATR (Attenuated Total Reflectance)

- Setup: Use a Diamond or ZnSe crystal.
- Application: Place the neat solid powder directly onto the crystal.
- Compression: Apply moderate pressure.
- Advantage: ATR minimizes sample heating and dehydration, often providing a more "true-to-state" spectrum for boronic acids susceptible to anhydride formation.

References

- Faniran, J. A., & Shurvell, H. F. (1968).[2] Infrared spectra of phenylboronic acid (normal and deuterated) and diphenyl phenylboronate. Canadian Journal of Chemistry, 46(12), 2089–2095. Link
- NIST Chemistry WebBook.Infrared Spectrum of Cyclohexane. National Institute of Standards and Technology. Link
- Sigma-Aldrich.(4-Cyclohexylphenyl)boronic acid Product Specification & Safety Data. Link
- Socrates, G. (2001). Infrared and Raman Characteristic Group Frequencies: Tables and Charts. 3rd Edition. Wiley.[3] (Standard reference for meta- vs para-substitution patterns).
- Storey, A. et al. (2014). Vibrational Properties of Boroxine Anhydride and Boronate Ester Materials. Journal of Physical Chemistry A. Link

Need Custom Synthesis?

BenchChem offers custom synthesis for rare earth carbides and specific isotopiclabeling.

Email: info@benchchem.com or Request Quote Online.

Sources

- 1. IR Spectrum | Table of IR Spectroscopy Values | ChemTalk [chemistrytalk.org]
- 2. researchgate.net [researchgate.net]
- 3. 3-Acetylphenylboronic acid | C8H9BO3 | CID 2734310 - PubChem [pubchem.ncbi.nlm.nih.gov]
- To cite this document: BenchChem. [Publish Comparison Guide: IR Spectroscopy of (3-Cyclohexylphenyl)boronic Acid]. BenchChem, [2026]. [Online PDF]. Available at: [https://www.benchchem.com/product/b13474058/docs#publish-comparison-guide-ir-spectroscopy-of-3-cyclohexylphenyl-boronic-acid]

Disclaimer & Data Validity:

The information provided in this document is for Research Use Only (RUO) and is strictly not intended for diagnostic or therapeutic procedures. While BenchChem strives to provide accurate protocols, we make no warranties, express or implied, regarding the fitness of this product for every specific experimental setup.

Technical Support: The protocols provided are for reference purposes. Unsure if this reagent suits your experiment?

Need Industrial/Bulk Grade? Request Custom Synthesis Quote

BenchChem

Our mission is to be the trusted global source of essential and advanced chemicals, empowering scientists and researchers to drive progress in science and industry.

Contact

Address: 3281 E Guasti Rd

Ontario, CA 91761, United States

Phone: (601) 213-4426

Email: info@benchchem.com

© 2026 BenchChem. All rights reserved.

Contact our Ph.D. Support Team for a compatibility check

© 2026 BenchChem. All rights reserved.