In Vitro Pharmacological Profile of SMU-B: A Technical Guide

Author: BenchChem Technical Support Team. **Date**: April 2026

Compound of Interest

Compound Name: *SMU-B*

Cat. No.: *B13443912*

Get Quote

For Researchers, Scientists, and Drug Development Professionals

Abstract

SMU-B, also known as 6-[6-Amino-5-[(1R)-1-(2,6-dichloro-3-fluorophenyl)ethoxy]-3-pyridyl]-1'-methylspiro[indoline-3,4'-piperidine]-2-one, is a novel, orally bioavailable small molecule inhibitor targeting key oncogenic receptor tyrosine kinases.[1][2] This technical guide provides a comprehensive overview of the in vitro pharmacological profile of **SMU-B**, summarizing its biochemical and cellular activities, kinase selectivity, and the signaling pathways it modulates. Detailed methodologies for the key experimental assays are also provided to facilitate reproducibility and further investigation.

Biochemical and Cellular Activity

SMU-B has demonstrated potent inhibitory activity against Anaplastic Lymphoma Kinase (ALK), c-Met (hepatocyte growth factor receptor), and c-ros oncogene 1 (ROS1).[3][4] The half-maximal inhibitory concentrations (IC50) from both enzymatic and cellular assays are summarized in Table 1.

© 2026 BenchChem. All rights reserved.

Target	Enzymatic IC50 (nM)	Cellular IC50 (μM)	Cell Line
ALK	<0.5	-	-
c-Met	1.87	-	-
ROS1	Not explicitly quantified	-	-
AXL	28.9	-	-
MKN45 (c-Met driven)	-	0.02	Gastric Carcinoma
H1993 (c-Met amplified)	-	1.58	Non-Small Cell Lung Cancer
H441	-	2.82	Non-Small Cell Lung Cancer

Table 1: In Vitro Inhibitory Activity of **SMU-B** against Key Kinase Targets and Cancer Cell Lines. [3][4]

Kinase Selectivity Profile

The selectivity of a kinase inhibitor is a critical determinant of its therapeutic window. **SMU-B** was profiled against a panel of 97 kinases to assess its selectivity. The results indicate a high degree of selectivity for ALK, c-Met, and AXL.

Kinase Target	Percent of Control at 100 nM
c-Met	<10%
ALK	<10%
AXL	<10%
Other 94 kinases	>10%

Table 2: Kinase Selectivity Profile of **SMU-B**.

© 2026 BenchChem. All rights reserved.

Signaling Pathways

SMU-B exerts its anti-cancer effects by inhibiting the downstream signaling cascades initiated by ALK, c-Met, and ROS1. These pathways are crucial for cell proliferation, survival, and migration.

ALK Signaling Pathway

Anaplastic Lymphoma Kinase (ALK) is a receptor tyrosine kinase that, when constitutively activated through genetic alterations, drives tumorigenesis. Upon activation, ALK dimerizes and autophosphorylates, creating docking sites for various signaling proteins. This leads to the activation of several key downstream pathways, including the RAS-MAPK, PI3K-AKT, and JAK-STAT pathways, which collectively promote cell proliferation, survival, and inhibit apoptosis.

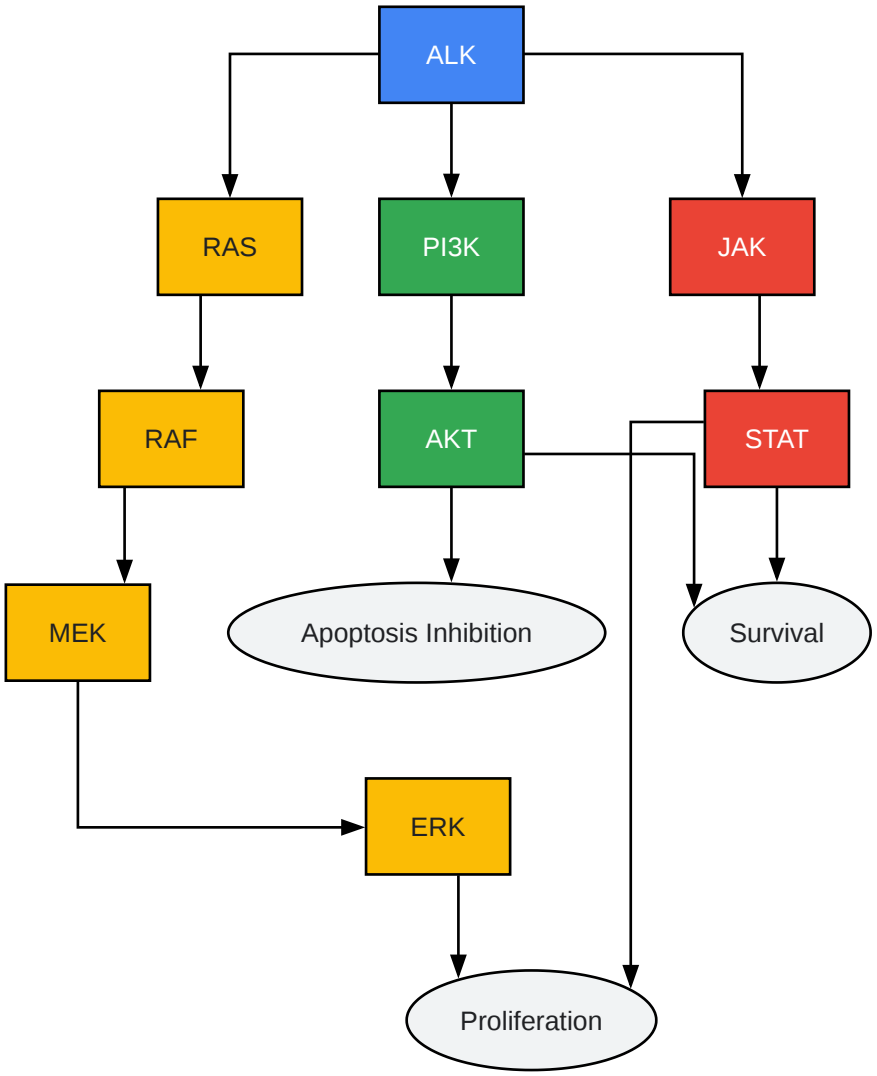

© 2026 BenchChem. All rights reserved.

Click to download full resolution via product page

Figure 1: ALK Signaling Pathway.

c-Met Signaling Pathway

The c-Met receptor, upon binding to its ligand, hepatocyte growth factor (HGF), undergoes dimerization and autophosphorylation. This activation triggers a cascade of intracellular signals, prominently involving the RAS-MAPK and PI3K-AKT pathways. These pathways are integral to processes such as cell motility, invasion, and proliferation, which are often dysregulated in cancer.

© 2026 BenchChem. All rights reserved.

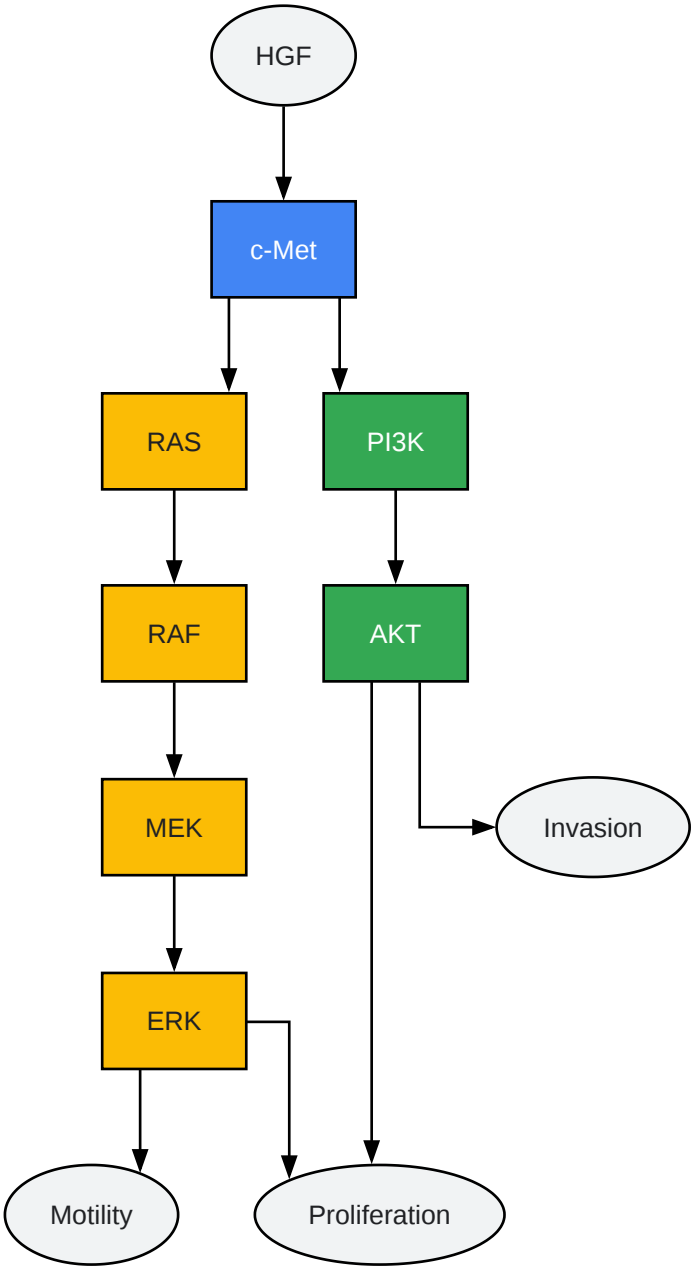

Click to download full resolution via product page

Figure 2: c-Met Signaling Pathway.

ROS1 Signaling Pathway

ROS1, a receptor tyrosine kinase with homology to ALK, can become oncogenic through chromosomal rearrangements. Activated ROS1 fusion proteins stimulate several downstream signaling pathways, including the RAS-MAPK, PI3K-AKT, and JAK-STAT pathways. These pathways converge to promote uncontrolled cell growth and survival.

© 2026 BenchChem. All rights reserved.

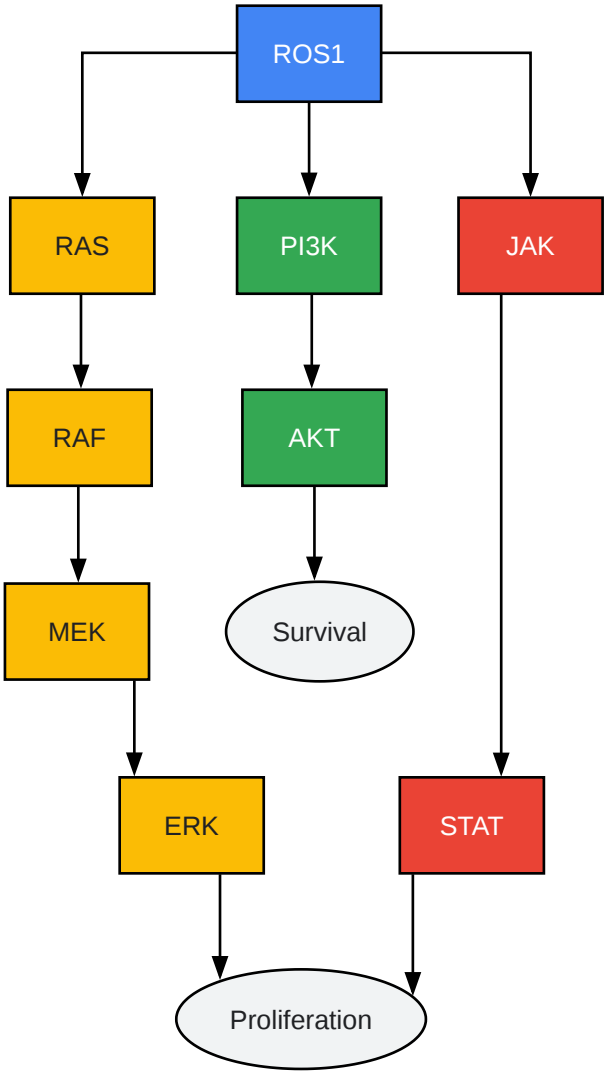

Click to download full resolution via product page

Figure 3: ROS1 Signaling Pathway.

Experimental Protocols

The in vitro pharmacological data for **SMU-B** were generated using established and robust assay platforms. The general methodologies are described below.

In Vitro Kinase Inhibition Assay (Biochemical)

The enzymatic activity of **SMU-B** against ALK, c-Met, and other kinases was likely determined using a nanoliter-scale radiometric or mobility shift assay. A generalized workflow for such an assay is depicted below.

© 2026 BenchChem. All rights reserved.

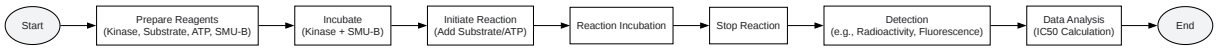

Click to download full resolution via product page

Figure 4: General Workflow for In Vitro Kinase Inhibition Assay.

Reaction Biology Corp's Nanoliter Kinase Assay (HotSpot™ Platform): This assay typically utilizes a radioactive filter-binding method. The kinase, a specific substrate (peptide or protein), and the test compound (**SMU-B**) are incubated together. The reaction is initiated by the addition of radiolabeled ATP (e.g., 33P-ATP). Following incubation, the reaction mixture is transferred to a filter membrane which captures the phosphorylated substrate. The amount of incorporated radioactivity is then quantified, and the percentage of inhibition is calculated relative to a control without the inhibitor. IC50 values are determined by fitting the dose-response data to a sigmoidal curve.

Kinase Selectivity Profiling

The kinase selectivity of **SMU-B** was assessed using DiscoveRx's scanEDGE℠ panel, which employs a competition binding assay format.

DiscoveRx's scanEDGE℠ Assay: This technology is based on a competition binding assay where the test compound (**SMU-B**) competes with an immobilized, active site-directed ligand for binding to the kinase. The amount of kinase bound to the solid support is quantified, typically using qPCR to measure a DNA tag conjugated to the kinase. A lower amount of bound kinase in the presence of the test compound indicates stronger binding and inhibition. The results are reported as a percentage of the control (no inhibitor).

Cellular Proliferation Assay

The anti-proliferative activity of **SMU-B** in cancer cell lines was likely determined using a standard method such as the MTT or CellTiter-Glo® assay.

General Protocol:

- Cancer cells are seeded in 96-well plates and allowed to adhere overnight.

© 2026 BenchChem. All rights reserved.

- The cells are then treated with serial dilutions of **SMU-B** or a vehicle control (e.g., DMSO).
- After a specified incubation period (e.g., 72 hours), a reagent that measures cell viability is added.
- For MTT assays, the tetrazolium dye is reduced by metabolically active cells to a colored formazan product, which is then solubilized and quantified by measuring its absorbance.
- For CellTiter-Glo® assays, the reagent lyses the cells and measures the amount of ATP present, which is proportional to the number of viable cells, through a luminescent reaction.
- The IC50 values are calculated from the dose-response curves.

Conclusion

SMU-B is a potent and highly selective dual inhibitor of ALK and c-Met, with additional activity against ROS1 and AXL. Its strong in vitro anti-proliferative effects in relevant cancer cell lines are mediated through the inhibition of key oncogenic signaling pathways. The favorable pharmacological profile of **SMU-B** warrants further investigation as a potential therapeutic agent for cancers driven by ALK, c-Met, or ROS1 aberrations.

Need Custom Synthesis?

BenchChem offers custom synthesis for rare earth carbides and specific isotopiclabeling.

Email: info@benchchem.com or Request Quote Online.

References

- 1. reactionbiology.com [reactionbiology.com]
- 2. reactionbiology.com [reactionbiology.com]
- 3. reactionbiology.com [reactionbiology.com]
- 4. eurofinsdiscovery.com [eurofinsdiscovery.com]
- To cite this document: BenchChem. [In Vitro Pharmacological Profile of SMU-B: A Technical Guide]. BenchChem, [2026]. [Online PDF]. Available at:

© 2026 BenchChem. All rights reserved.

[https://www.benchchem.com/product/b13443912/docs#in-vitro-pharmacological-profile-of-smu-b-a-technical-guide]

Disclaimer & Data Validity:

The information provided in this document is for Research Use Only (RUO) and is strictly not intended for diagnostic or therapeutic procedures. While BenchChem strives to provide accurate protocols, we make no warranties, express or implied, regarding the fitness of this product for every specific experimental setup.

Technical Support: The protocols provided are for reference purposes. Unsure if this reagent suits your experiment?

Need Industrial/Bulk Grade? Request Custom Synthesis Quote

BenchChem

Our mission is to be the trusted global source of essential and advanced chemicals, empowering scientists and researchers to drive progress in science and industry.

Contact

Address: 3281 E Guasti Rd

Ontario, CA 91761, United States

Phone: (601) 213-4426

Email: info@benchchem.com

Contact our Ph.D. Support Team for a compatibility check