Mass Spectrometry Fragmentation of Boc-Sar-OMe: A Technical Guide

Author: BenchChem Technical Support Team. **Date**: May 2026

Compound of Interest

Compound Name:	*Methyl 2-((tert-butoxycarbonyl)(methyl)amino)acetate*
CAS No.:	*42492-57-9*
Cat. No.:	*B1339764*

Get Quote

For Researchers, Scientists, and Drug Development Professionals

This technical guide provides an in-depth analysis of the expected mass spectrometry fragmentation pattern of N-tert-butoxycarbonyl-sarcosine methyl ester (Boc-Sar-OMe). The fragmentation pathways described herein are based on established principles of mass spectrometry and documented fragmentation of structurally similar N-Boc protected amino acid esters. This document is intended to serve as a valuable resource for researchers in proteomics, drug discovery, and synthetic chemistry who utilize mass spectrometry for the characterization of modified amino acids.

Introduction

N-tert-butoxycarbonyl (Boc) protected amino acids are fundamental building blocks in solid-phase peptide synthesis and medicinal chemistry. Understanding their behavior under mass spectrometric analysis is crucial for reaction monitoring, quality control, and structural elucidation. Boc-Sar-OMe, a derivative of the N-methylated amino acid sarcosine, presents a clear model for examining the characteristic fragmentation of this class of compounds. This

© 2026 BenchChem. All rights reserved.

guide will detail the primary fragmentation pathways under electrospray ionization (ESI) conditions.

Predicted Core Fragmentation Pathways

Under typical positive-ion ESI-MS/MS conditions, the protonated molecule $[M+H]^+$ of Boc-Sar-OMe ($C_9H_{17}NO_4$, Molecular Weight: 203.24 g/mol) is expected to undergo several characteristic fragmentation reactions. The primary sites of fragmentation are the labile Boc protecting group and the ester functionality.

The fragmentation of the Boc group is a dominant process for N-Boc protected amino acids. Common fragmentation patterns involve the loss of isobutylene (56 Da) or the entire Boc group. For esters, cleavage adjacent to the carbonyl group is a typical fragmentation route, often resulting in the loss of the alkoxy group. A McLafferty-type rearrangement is also a possible fragmentation pathway for Boc-protected amines, leading to the neutral loss of isobutylene.

The proposed fragmentation pathways for Boc-Sar-OMe are visualized in the following diagram:

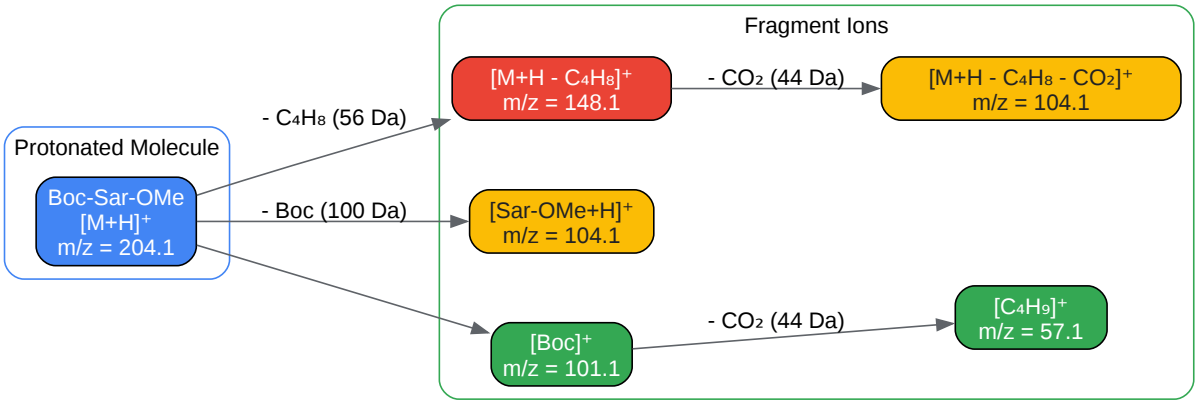

Click to download full resolution via product page

© 2026 BenchChem. All rights reserved.

Caption: Proposed ESI-MS/MS fragmentation pathway of Boc-Sar-OMe.

Tabulated Quantitative Data

The following table summarizes the predicted major fragment ions for Boc-Sar-OMe, their corresponding mass-to-charge ratios (m/z), and the neutral loss from the protonated molecule.

Fragment Ion	Proposed Structure	m/z (monoisotopic)	Neutral Loss	Da
$[M+H]^+$	Protonated Boc-Sar-OMe	204.1	-	-
$[M+H - C_4H_8]^+$	Protonated molecule after loss of isobutylene	148.1	C_4H_8	56.1
$[M+H - Boc]^+$	Protonated Sarcosine Methyl Ester	104.1	$C_5H_8O_2$	100.1
$[Boc]^+$	tert-Butoxycarbonyl cation	101.1	$C_4H_8NO_2$	103.1
$[C_4H_9]^+$	tert-Butyl cation	57.1	$C_5H_8NO_4$	147.1

Experimental Protocols

While a specific experimental record for Boc-Sar-OMe is not provided, a general methodology for analyzing such a compound using ESI-MS/MS is outlined below. This protocol is based on standard practices for the analysis of small molecules and protected amino acids.

Sample Preparation:

- Dissolve Boc-Sar-OMe in a suitable solvent system, typically a mixture of acetonitrile and water (e.g., 50:50 v/v), to a final concentration of approximately 1-10 µg/mL.

© 2026 BenchChem. All rights reserved.

- Acidify the solution with a small amount of formic acid (e.g., to a final concentration of 0.1%) to promote protonation and enhance signal intensity in positive ion mode.

Mass Spectrometry Analysis:

- Instrumentation: A quadrupole time-of-flight (Q-TOF) or a triple quadrupole (QqQ) mass spectrometer equipped with an electrospray ionization (ESI) source.
- Ionization Mode: ESI positive ion mode.
- Infusion: Direct infusion of the sample solution via a syringe pump at a flow rate of 5-10 µL/min.
- ESI Source Parameters:
  - Capillary Voltage: 3.5 - 4.5 kV
  - Nebulizing Gas (N_2): 1 - 2 Bar
  - Drying Gas (N_2): 4 - 8 L/min
  - Drying Gas Temperature: 180 - 220 °C
- MS Scan: Acquire full scan mass spectra over a range of m/z 50-500 to identify the protonated molecule $[M+H]^+$.
- MS/MS Fragmentation:
  - Select the $[M+H]^+$ ion (m/z 204.1) as the precursor ion for collision-induced dissociation (CID).
  - Apply a range of collision energies (e.g., 10-40 eV) using argon as the collision gas to induce fragmentation and record the resulting product ion spectrum.

The following diagram illustrates the general experimental workflow:

© 2026 BenchChem. All rights reserved.

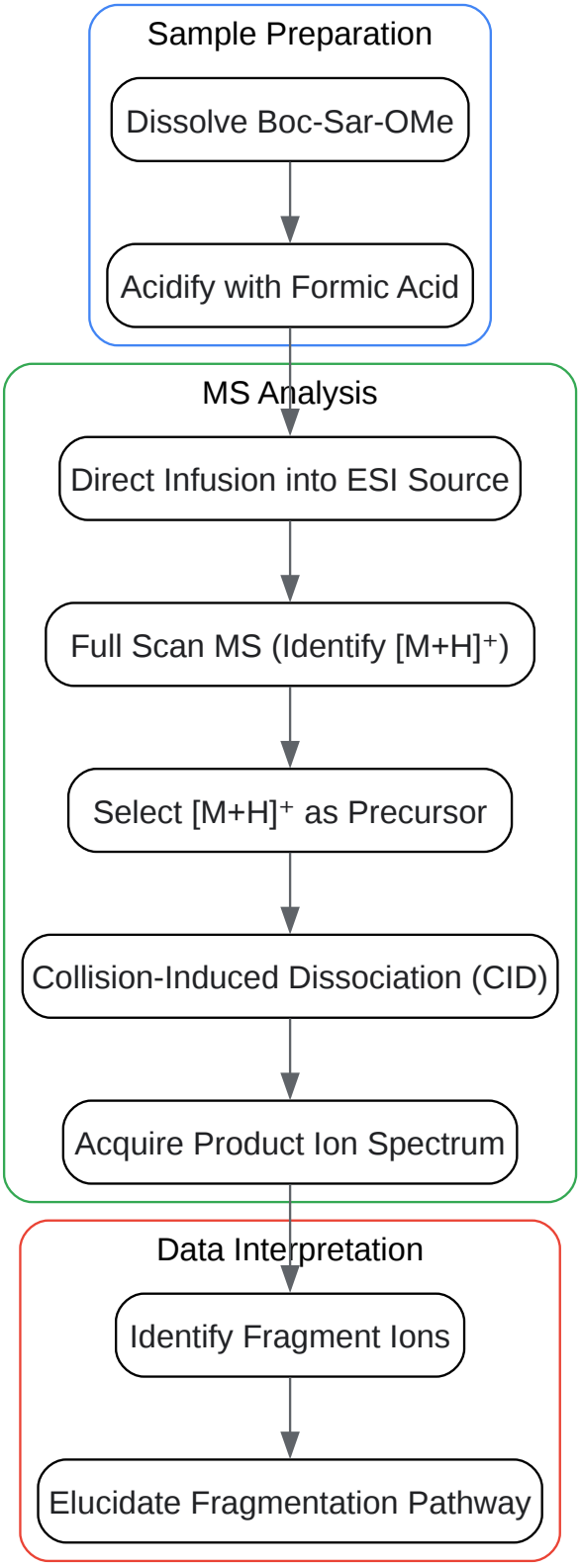

Click to download full resolution via product page

Caption: General experimental workflow for MS/MS analysis of Boc-Sar-OMe.

© 2026 BenchChem. All rights reserved.

Conclusion

The mass spectrometry fragmentation of Boc-Sar-OMe is predicted to be dominated by the characteristic losses from the Boc protecting group, leading to key fragment ions at m/z 148.1, 104.1, and 57.1. The protocols and data presented in this guide provide a solid framework for the identification and structural confirmation of this and similar N-Boc protected amino acid derivatives. Researchers can utilize this information to interpret their own experimental data and to develop analytical methods for compounds containing the Boc moiety.

- To cite this document: BenchChem. [Mass Spectrometry Fragmentation of Boc-Sar-OMe: A Technical Guide]. BenchChem, [2026]. [Online PDF]. Available at: [https://www.benchchem.com/product/b1339764/docs#mass-spectrometry-fragmentation-of-boc-sar-ome-a-technical-guide]

Disclaimer & Data Validity:

The information provided in this document is for Research Use Only (RUO) and is strictly not intended for diagnostic or therapeutic procedures. While BenchChem strives to provide accurate protocols, we make no warranties, express or implied, regarding the fitness of this product for every specific experimental setup.

Technical Support: The protocols provided are for reference purposes. Unsure if this reagent suits your experiment?

Need Industrial/Bulk Grade? Request Custom Synthesis Quote

BenchChem

Our mission is to be the trusted global source of essential and advanced chemicals, empowering scientists and researchers to drive progress in science and industry.

Contact

Address: 3281 E Guasti Rd

Ontario, CA 91761, United States

Phone: (601) 213-4426

Email: info@benchchem.com

© 2026 BenchChem. All rights reserved.

Contact our Ph.D. Support Team for a compatibility check

© 2026 BenchChem. All rights reserved.