Technical Support Center: OVA Peptide (323-339) Solubility

Author: BenchChem Technical Support Team. **Date**: April 2026

Compound of Interest

Compound Name:	*OVA Peptide (323-339)*
Cat. No.:	*B13384289*

Get Quote

This technical support center provides troubleshooting guidance and frequently asked questions (FAQs) for researchers, scientists, and drug development professionals experiencing solubility issues with lyophilized **OVA Peptide (323-339)**.

Troubleshooting Guide

Issue: Lyophilized **OVA Peptide (323-339)** is not dissolving in water.

Answer: If you are encountering difficulties dissolving lyophilized **OVA Peptide (323-339)** in water, please follow these troubleshooting steps:

- Ensure Proper Technique: Before adding the solvent, gently centrifuge the vial to ensure all the lyophilized powder is at the bottom. Allow the peptide and solvent to equilibrate to room temperature before reconstitution.
- Solvent Choice: While **OVA Peptide (323-339)** is generally soluble in water, the quality of the water is important. Use sterile, distilled, or ultrapure water.[1][2][3] Some protocols also suggest using PBS.[4][5]

© 2026 BenchChem. All rights reserved.

- Concentration: Attempt to dissolve the peptide at a concentration of 1 mg/mL or lower.[1][3] Higher concentrations may be more challenging to dissolve.
- Gentle Agitation: After adding the solvent, gently vortex or pipette the solution to mix.[1] Avoid vigorous shaking, which can cause aggregation.
- Sonication: For persistent solubility issues, brief sonication can be effective.[1][6] Use a bath sonicator and sonicate for short bursts (e.g., 10-15 seconds) on ice to prevent heating and degradation of the peptide.
- pH Adjustment: Some suppliers note that adjusting the pH can aid solubility. For instance, one source specifies solubility in water with an adjustment to pH 3 using acetic acid.[7][8]
- Initial Dissolution in Organic Solvent: For highly problematic batches, a small amount of an organic solvent can be used as a first step. Add a minimal volume of DMSO (e.g., 10 µL) to the lyophilized powder and mix.[4] Then, slowly add your aqueous buffer of choice to the desired final concentration.

Frequently Asked Questions (FAQs)

Q1: What is the recommended solvent for reconstituting lyophilized **OVA Peptide (323-339)**?

A1: The most commonly recommended solvent is high-purity water (distilled, double-distilled, or ultrapure).[1][2][3] Phosphate-buffered saline (PBS) is also a suitable solvent.[4][5] For peptides that are difficult to dissolve, starting with a small amount of DMSO before adding the aqueous buffer can be helpful.[4]

Q2: What is the maximum recommended concentration for dissolving **OVA Peptide (323-339)**?

A2: It is generally recommended to reconstitute the peptide at a concentration of 1 mg/mL or less.[1][3] Some suppliers indicate solubility up to 2 mg/mL in distilled water.[9] One source provides a specific solubility of 10.53 mg/mL in water, but this requires pH adjustment.[7][8]

Q3: My reconstituted OVA peptide solution appears cloudy. What should I do?

A3: A cloudy solution indicates that the peptide is not fully dissolved and may be aggregated.[6] Try the following:

© 2026 BenchChem. All rights reserved.

- Gentle warming: Briefly warm the solution (e.g., to 37°C) to see if the peptide goes into solution. Avoid excessive heat.
- Sonication: As mentioned in the troubleshooting guide, brief sonication can help break up aggregates.[1][6]
- Dilution: If the concentration is high, diluting the sample with more solvent may help it to dissolve completely.

Q4: How should I store the reconstituted **OVA Peptide (323-339)** solution?

A4: Once reconstituted, it is recommended to aliquot the peptide solution into smaller, single-use volumes and store them at -20°C or lower.[1][10] This will prevent degradation from repeated freeze-thaw cycles.

Q5: Can I use buffers other than PBS to dissolve the peptide?

A5: Yes, other biological buffers such as Tris buffer at a neutral pH can be used.[6] However, it is always best to first consult the manufacturer's product data sheet for any specific buffer incompatibilities.

Quantitative Data Summary

Parameter	Value	Solvent/Conditions	Source(s)
Recommended Reconstitution Concentration	0.5 - 1 mg/mL	Distilled or high-quality water	[1]
Maximum Solubility in Water	Up to 2 mg/mL	Distilled water	[9]
Specific Solubility	10.53 mg/mL	H_2O (with pH adjusted to 3 with acetic acid)	[7][8]

Experimental Protocols

© 2026 BenchChem. All rights reserved.

Standard Reconstitution Protocol for **OVA Peptide (323-339)**

- Preparation: Allow the vial of lyophilized peptide to warm to room temperature before opening. Centrifuge the vial briefly to ensure the powder is at the bottom.
- Solvent Addition: Add the appropriate volume of sterile, high-purity water or PBS to achieve the desired concentration (e.g., 1 mg/mL).
- Dissolution: Gently vortex or pipette the solution up and down to mix. If the peptide does not dissolve completely, proceed to troubleshooting steps such as brief sonication.
- Storage: Once fully dissolved, aliquot the solution into single-use tubes and store at -20°C or below.[1][10]

Protocol for T-Cell Stimulation using **OVA Peptide (323-339)**

This protocol describes the use of reconstituted OVA peptide to pulse antigen-presenting cells (APCs) for the subsequent stimulation of OVA-specific CD4+ T-cells.

- Cell Preparation: Isolate APCs (e.g., dendritic cells or macrophages) and OVA-specific CD4+ T-cells (e.g., from OT-II mice) using standard cell isolation techniques.
- Peptide Pulsing: Resuspend the APCs in complete cell culture medium. Add the reconstituted **OVA Peptide (323-339)** to the APC suspension at a final concentration typically ranging from 1 to 10 µg/mL.[1]
- Incubation: Incubate the APCs with the peptide for 1-2 hours at 37°C in a humidified CO_2 incubator to allow for peptide loading onto MHC class II molecules.
- Washing: After incubation, wash the APCs with fresh culture medium to remove any unbound peptide.
- Co-culture: Co-culture the peptide-pulsed APCs with the isolated OVA-specific CD4+ T-cells.

© 2026 BenchChem. All rights reserved.

- Assay: Analyze T-cell activation after a suitable incubation period (e.g., 24-72 hours) by measuring cytokine production (e.g., IL-2 via ELISpot or ELISA) or T-cell proliferation (e.g., via [^{3}H]thymidine incorporation).[11]

Visualizations

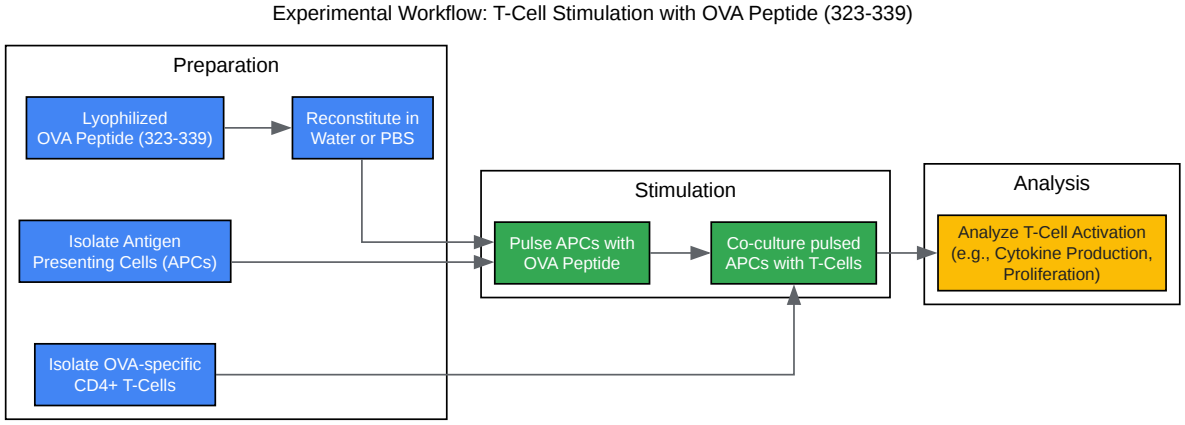

Click to download full resolution via product page

Caption: Workflow for T-cell stimulation using **OVA Peptide (323-339)**.

© 2026 BenchChem. All rights reserved.

MHC Class II Antigen Presentation Pathway

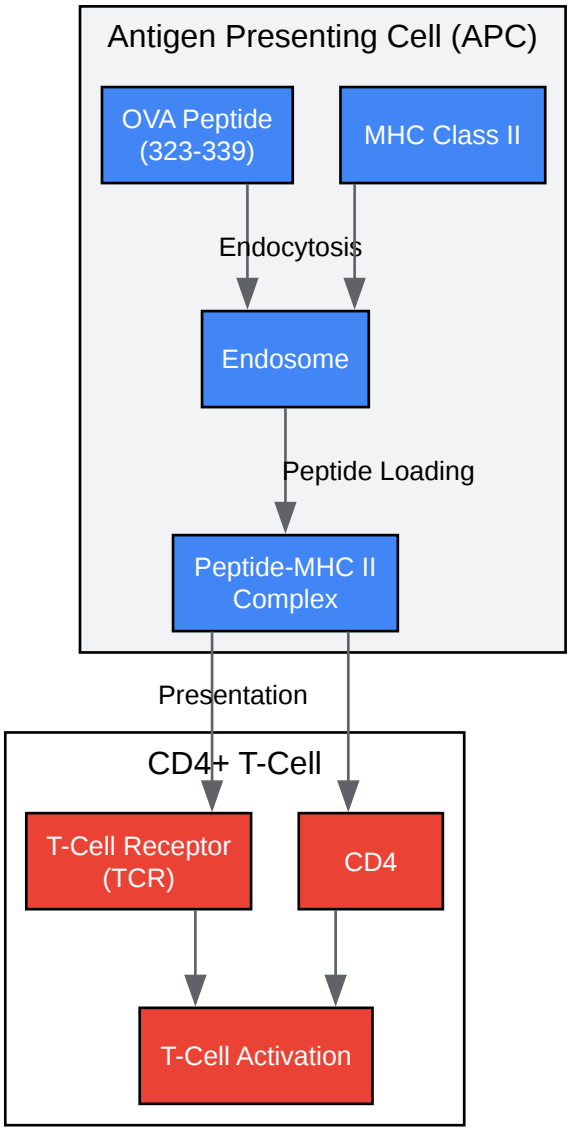

Click to download full resolution via product page

Caption: MHC Class II presentation of **OVA Peptide (323-339)** to a CD4+ T-cell.

Need Custom Synthesis?

BenchChem offers custom synthesis for rare earth carbides and specific isotopiclabeling.

Email: info@benchchem.com or Request Quote Online.

References

- 1. anaspec.com [anaspec.com]
- 2. 卵清蛋白（323-339）（鸡、日本鹌鹑） | Sigma-Aldrich [sigmaaldrich.com]
- 3. genscript.com [genscript.com]
- 4. OVA(323-339), amide - TriDix Bio [tridixbio.com]
- 5. 4adi.com [4adi.com]
- 6. Peptide Solubility Guidelines - How to solubilize a peptide [sb-peptide.com]
- 7. medchemexpress.com [medchemexpress.com]
- 8. file.medchemexpress.com [file.medchemexpress.com]
- 9. abbiotec.com [abbiotec.com]
- 10. eurogentec.com [eurogentec.com]
- 11. pnas.org [pnas.org]

- To cite this document: BenchChem. [Technical Support Center: OVA Peptide (323-339) Solubility]. BenchChem, [2026]. [Online PDF]. Available at: [https://www.benchchem.com/product/b13384289/docs#technical-support-center-ova-peptide-323-339-solubility]

Disclaimer & Data Validity:

The information provided in this document is for Research Use Only (RUO) and is strictly not intended for diagnostic or therapeutic procedures. While BenchChem strives to provide accurate protocols, we make no warranties, express or implied, regarding the fitness of this product for every specific experimental setup.

Technical Support: The protocols provided are for reference purposes. Unsure if this reagent suits your experiment?

Need Industrial/Bulk Grade? Request Custom Synthesis Quote

© 2026 BenchChem. All rights reserved.

BenchChem

Our mission is to be the trusted global source of essential and advanced chemicals, empowering scientists and researchers to drive progress in science and industry.

Contact

Address: 3281 E Guasti Rd

Ontario, CA 91761, United States

Phone: (601) 213-4426

Email: info@benchchem.com

Contact our Ph.D. Support Team for a compatibility check

© 2026 BenchChem. All rights reserved.